This is a digital copy of a book that was preserved for generations on library shelves before it was carefully scanned by Google as part of a project to make the world's books discoverable online.

It has survived long enough for the copyright to expire and the book to enter the public domain. A public domain book is one that was never subject to copyright or whose legal copyright term has expired. Whether a book is in the public domain may vary country to country. Public domain books are our gateways to the past, representing a wealth of history, culture and knowledge that's often difficult to discover.

Marks, notations and other marginalia present in the original volume will appear in this file - a reminder of this book's long journey from the publisher to a library and finally to you.

Usage guidelines

Google is proud to partner with libraries to digitize public domain materials and make them widely accessible. Public domain books belong to the public and we are merely their custodians. Nevertheless, this work is expensive, so in order to keep providing this resource, we have taken steps to prevent abuse by commercial parties, including placing technical restrictions on automated querying.

We also ask that you:

+ *Make non-commercial use of the files* We designed Google Book Search for use by individuals, and we request that you use these files for personal, non-commercial purposes.
+ *Refrain from automated querying* Do not send automated queries of any sort to Google's system: If you are conducting research on machine translation, optical character recognition or other areas where access to a large amount of text is helpful, please contact us. We encourage the use of public domain materials for these purposes and may be able to help.
+ *Maintain attribution* The Google "watermark" you see on each file is essential for informing people about this project and helping them find additional materials through Google Book Search. Please do not remove it.
+ *Keep it legal* Whatever your use, remember that you are responsible for ensuring that what you are doing is legal. Do not assume that just because we believe a book is in the public domain for users in the United States, that the work is also in the public domain for users in other countries. Whether a book is still in copyright varies from country to country, and we can't offer guidance on whether any specific use of any specific book is allowed. Please do not assume that a book's appearance in Google Book Search means it can be used in any manner anywhere in the world. Copyright infringement liability can be quite severe.

About Google Book Search

Google's mission is to organize the world's information and to make it universally accessible and useful. Google Book Search helps readers discover the world's books while helping authors and publishers reach new audiences. You can search through the full text of this book on the web at `http://books.google.com/`

1837
ARTES VERITAS SCIENTIA
LIBRARY OF THE
UNIVERSITY OF MICHIGAN
E PLURIBUS UNUM
TUEBOR
SI QUAERIS PENINSULAM AMOENAM CIRCUMSPICE
DEPARTMENT
OF
ENGINEERING

Engin. Library
TK
4161
.H64

GENERAL LIBRARY
University of
MICHIGAN

THE ELECTRIC LIGHT

IN ITS

PRACTICAL APPLICATION.

BY

PAGET HIGGS, LL.D., D.Sc.,

TELFORD PRIZEMAN AND ASSOCIATE MEMBER OF THE INSTITUTION OF CIVIL ENGINEERS,

Author of
"Electric Lighting," "Some Recent Improvements in Dynamo-Electric Apparatus,"
"Electrical Formulæ" (Molesworth's Pocket-Book),
Papers on Practical Plating, etc.

LONDON:
E. & F. N. SPON, 46, CHARING CROSS.
NEW YORK: 446, BROOME STREET.
1879.

PREFACE.

The following pages are intended to give the reader an account of what has been effected in the numerous endeavours to obtain a practicable system of electric lighting. But the details have been confined to those necessary to form judgment of the advantages of each system. Abstruse discussion has been carefully avoided, and questions have not been raised to which answer could not be found in previous practice. The labours of Du Moncel and Fontaine, the reports of Tyndall, Houston, Thomson, Deacon, Haywood, and others, have been freely utilized, the object having been to give both *pro* and *contra*.

Much descriptive matter and numerous illustrations have been taken from my translation of Fontaine's "Éclairage Électrique," now out of print; and considerable indebtedness must be acknowledged to other sources, named in the text. Where my own experience has led me to a conclusion, I have ventured to express it, but I have always also stated the reason for the deduction.

There must necessarily be, in a technical work of this character, many imperfections. Recent and untried inventions, promising much, cannot be omitted from notice; nor, from want of knowledge of detail, can a probably correct opinion be held. Electric lighting is, indeed, so far within its period of infancy that, in many cases, suspense of judgment is compulsory. Nearly every week marks an important advance, proving the present incomplete state of this branch of engineering.

With regard to the future of electric lighting, little has been said in this book. Public opinion, if not always strictly accurate, generally approximates to the correct idea of the commercial value of a newly introduced method, and its perception of the advantages of the electric light, either future or immediate, has not been greatly misled, however exaggerated may have been the statements of interested speculators. It is beyond doubt that in the present we may look for practical, if not great, improvements, that will cause in no distant future the adoption of electric lighting for very many important, as well as ultimately for general, purposes.

Logical sequence has been followed as far as possible, so as to afford aid to the general reader. The first chapter deals with the principles of the voltaic arc, and distinguishes the method of lighting by incandescence. The various forms of lamps employing the voltaic arc are next described, with so-called "candles" and candle-lamps, followed by discussion of most of the proposed systems of lighting by the incandescence of carbon or platinum. The principal magneto- and dynamo-electric machines are then described, with the new multiple-circuit machines, followed by a full consideration of the mechanical efficiency of these machines, and sufficient simple mathematical data to enable the reader to form his own conclusion of the merits of a fresh project. Next the question of cost is entered into. The various well-defined schemes for division of the electric light are commented upon. The book is concluded with chapters on the maritime and military and various applications of the electric light, and descriptions of the several methods of preparing the carbons consumed in the lamps. There is also a chapter on apparatus for maintaining electric currents at constant strength, although this kind of apparatus has not met with practical application.

In conclusion, I can only hope that my readers, whether of the press or of the public, will accord me the kindly consideration extended to my previous attempt to place before them a synopsis of this subject.

PAGET HIGGS.

CONTENTS.

CHAPTER I.

PAGE

INTRODUCTORY 1

CHAPTER II.

LAMPS OR BURNERS, EMPLOYING THE VOLTAIC ARC 8

CHAPTER III.

ELECTRIC "CANDLES" AND CANDLE-LAMPS 45

CHAPTER IV.

LIGHTING BY INCANDESCENCE 54

CHAPTER V.

MAGNETO- AND DYNAMO-ELECTRIC MACHINES 71

CHAPTER VI.

MECHANICAL EFFICIENCY OF ELECTRIC-LIGHT MACHINES 127

CHAPTER VII.

PAGE
Simple Mathematical Considerations concerning Electric Lighting 158

CHAPTER VIII.

Electric Regulators 176

CHAPTER IX.

Commercial Aspect of Electric Lighting 184

CHAPTER X.

Division of the Electric Light 214

CHAPTER XI.

Maritime and Military Applications 217

CHAPTER XII.

Various Applications of the Electric Light 228

CHAPTER XIII.

Electric Carbons 233

THE ELECTRIC LIGHT

IN ITS

PRACTICAL APPLICATION.

CHAPTER I.

INTRODUCTORY.

THE electric light can be obtained, practically, by two methods. Given a sufficiently intense electric source, there are placed in the circuit, at, say, each of its severed ends, two sticks or rods of carbon. These sticks are brought into contact; they become heated, glow, and upon slightly separating them, the phenomenon known as the *voltaic arc* appears. This is one method of producing the electric light.

It is a property of the electric current that, when passed through a badly conducting substance, it causes that substance to become heated. A carbon rod, a piece of platinum wire, or thin iron wire, interposed in an electric circuit, becomes heated, and glows with an intensity of light dependent upon the strength of the current and the resistance offered by the bad conductor. In one case, the circuit is interrupted by the space over which the voltaic arc plays; in the other, known as lighting by *incandescence*, the bad conductor is continuous.

Upon these two methods of lighting by electricity depend two distinct classes of apparatus, or lamps, for effecting illumination in a practical manner.

Light may also be produced by the use of Geisler tubes.

These are glass tubes, exhausted of air, and filled with rarefied gases, which become luminous upon passage of an induced current of high intensity. But the light developed is very feeble, and unsuited to any ordinary purpose. Consideration will, therefore, be given to only the preceding methods.

Brilliancy of the voltaic arc depends upon the strength of the electric current, upon the nature of the electrodes or terminations of the circuit where the light appears, and upon the nature of the atmosphere in which it is produced. With potassium or sodium the light is more brilliant than with platinum or gold; mercurial vapours and hydrogen reduce the light. The colour of the arc varies with the constitution of the electrodes, being yellow with sodium, white with zinc, magnesium, and green with silver.

Fig. 1.

The appearance of the arc depends upon the form and nature of the electrodes. With a carbon point at the positive, and a platinum plate at the negative, electrode, the arc takes the form of a cone, becoming egg-shaped when a second carbon point is substituted for the platinum plate.

The voltaic arc is the result of the incandescence of a jet of particles detached from the electrodes, and thrown from one electrode to the other, particularly from the positive pole to the negative pole. The positive electrode has a temperature much higher than the other, the negative electrode being barely red when the positive electrode is at white heat. The positive pole is consumed at double the rate at which the negative pole disappears, when the carbons are equal in size. The arc (Fig. 1) appears

as a flickering flame, and brilliant particles are constantly carried between the two electrodes. Molten globules of mineral impurities appear, *g g′*, upon the carbon points. When the carbons are chemically pure, these globules do not appear. This is the appearance of the arc as it burns in air. In a vacuum the carbons are not consumed with such rapidity, the positive point becomes hollowed out and diminished in weight, while the negative point increases in volume (Fig. 2).

FIG. 2.

When the electrodes are unequal in size, experience has shown that it is advantageous to make the negative the larger, and this electrode can be so extended that its consumption becomes practically *nil.* Upon this principle several electric lamps have been constructed, in which metallic electrodes of large surface have been substituted for the negative carbon.

The voltaic arc behaves precisely as any other portion of the electric circuit. It is attracted or repelled by magnets in exactly similar manner. Indeed, the incandescent particles constitute between the two electrodes a conductor of great mobility; and the arc may be regarded as a badly conducting chain of these particles, raised to incandescence, in consequence of the resistance they offer to the passage of the current.

The length of the arc follows certain definite laws, and these were determined by Despretz in 1850. He found that the length of the arc increased more quickly than the number of elements employed to produce it; that this increase is larger with small arcs than with large. The arc produced with 100 Bunsen elements is nearly quadruple that produced by 50 elements; that resulting from 200 elements is not triple that from 100; that from 600 elements is about 7½ times greater than that from 100. The battery of 600 elements, coupled in a single series, gives as much as 7·87 inches of arc when the positive carbon is the higher; that, when the elements are

coupled in quantity, the length of the arc increases less quickly than the number of elements. The arc from 100 elements being 0·98 inches, it is only 2·7 inches with 600 elements coupled in six series of 100, whilst with the same battery of 600 elements coupled in tension it attains 6·5 inches. Coupling successively in quantity series of batteries of 25 elements in tension, there is obtained: for a single series, nearly no arc at all; for two series, an arc still too small to be measured; for three series, 0·039 inches; and for 24 series, 0·45 inches. The same batteries coupled in tension give an arc of 6·37 inches, that is, a space between the carbons 14 times greater than with 24 series coupled in quantity. When the positive pole is the lower one, the voltaic arc is shorter than when the negative pole occupies this position. With six series of 100 elements coupled in quantity, there is obtained 2·9 inches distance when the positive pole is the higher and 2·2 inches if it be the lower. That when the electrodes are placed horizontally, the arcs are shorter than with vertical electrodes, and then the battery arranged for quantity is more advantageous than that for tension. Thus, six series of 100 elements coupled for quantity give a horizontal arc of 1·6 inches, and 600 elements, end to end, give only a horizontal arc of 1·06 inches.

These experiments explain very clearly the futility of constructing lamps in which the carbons are burnt horizontally, as well as the difficulties that constructors of magneto-electric machines have met in trying to obtain the voltaic light with apparatus of great quantity and low tension.

The electric light owes its special value to the creation of great heat in small compass, and to this end the best known means is electricity. This light has great analogy to that of the sun. It causes the combination of chlorine with hydrogen, decomposes chloride of silver, and it imparts phosphorescent properties to susceptible substances. M. Jamin has pointed out that the comparison of the electric arc to the sun, which is our highest conception of brilliancy, may be made in two ways: by the relative times required to produce equal photographic images, or by the direct measure of the illuminating powers. Fizeau and Foucault found by the first process that

the power of the sun is only two and a half times superior to that of the arc; the second method has proved that the carbon points with a powerful machine are equal to the sun in lustre.

The light of a gas flame is orange yellow when compared to that of the electric light. A light, to be applicable for purposes of illumination, must contain the seven primitive colours of the spectrum in certain proportions. All luminous bodies do not contain these colours in the same proportions. The electric arc, produced between silver and carbon, contains only two green bands, and if the silver be replaced by other metals, the spectrum obtained is always formed of brilliant lines separated by wide, dark spaces. These lights could not be used for illumination.

The spectra of gas and oil flames are continuous; the red, orange, and yellow are very abundant; there is but little green, almost no blue, and little or no violet. These flames are rich in colours, but slightly refrangible, which gives them their orange tint; poor in highly refrangible rays, and destitute of indigo and violet. The red may be removed, but it is impossible to add the indigo and violet, and this is the cause of their inferiority. The electric light is more complex; it proceeds at the same time from the carbons and from the arc, and differs according to the one or the other of the sources. That from the carbons is white, and the same as that of the sun. The light from the arc itself is violet blue, and its spectrum tends towards the most refrangible colours; it is the opposite of gas or lamp light; it contains little red, much blue, and a large excess of violet. It is the light of the arc which gives to electric illumination the bluish tint objected to with some reason. But the superfluous rays can be removed from the electric light by the interposition of uranium glass, solution of quinine sulphate, and many other substances.

The production of light is ordinarily a secondary phenomenon which accompanies the chemical combination of the combustible with the oxygen of the air. This combination removes the oxygen from the air, and replaces it by vapour of water and carbonic acid gas. The electric light has the decided advantage of not altering the state of the atmosphere.

The electric arc does not heat. This appears astonishing at first, for all bodies fuse or volatilize when introduced into the arc. The reason is that the heat-producing rays are by far more abundant in gas and lamp flames, than in the arc, which emits the greatest amount of light with the least proportion of heat.

The fault, continues M. Jamin, has often been committed of attempting street illumination on the lighthouse system by a beam of light concentrated by reflectors, and thrown along the length of the street. Such experiments have only succeeded in blinding the by-passers, and projecting long shadows behind them. There are cases when such concentration is the only end that is desired. In workshops, it is only necessary that the workman shall have a clear view of the work before him. It is the same in dining-rooms, billiard-halls, reading-rooms, etc., and no one pays attention to the obscurity behind him. It is different in depôts, theatres, lecture-rooms, and display storerooms; in these cases a general illumination is required, coming from all directions, and lighting every side of an object. When several electric lights are placed in a hall illuminated by gas, the eye immediately experiences a sort of relief, both by the redoubled brilliancy and by the perception of colours which were not before suspected; and, on the contrary, if the electric lights be suddenly extinguished, the spectators are thrown into the comparative night of the old illumination.

The conditions of good electrical lighting must be determined by a study of the general illumination of objects during the day. When the sky is clouded, the sunlight pierces the clouds as through a ground glass, and the whole sky is like an immense illuminated ceiling, radiating light from every point and in all directions. The objects illuminated diffuse in their turn the light which they receive, so that there is an intercrossing of rays, producing the effect of a mean amount of light everywhere. This is *general* illumination.

Such is the model that must be followed. For this purpose the ceiling, walls, and floors must be well illuminated, that the diffused light may be radiated into the empty spaces;

and, that the quantity may be the same everywhere, it will be necessary to multiply the sources of light. That the direct rays may not painfully affect the retina, it will also be necessary to diminish their brilliancy by the interposition of ground glass and some fluorescent substance, such as quinine sulphate, in order to transform the violet and ultra-violet rays into white light. Lastly, and especially, it will be necessary to cover all openings by which the light may escape.

The exterior light enters by the windows during the day, and it is by them that the nocturnal illumination escapes. M. Jablochkoff introduced electric lighting into the laboratory of the Sorbonne, and the feeble effect it produced was astonishing. This laboratory is covered with a glass roof, by which it is well lighted during the day, and by which it allowed the loss of at least one-half of the light produced by the electric candles. This wasted light illuminated the high walls of the surrounding buildings, and gave a brilliant but useless illumination in the court. The same thing happens with gas, and will occur with electricity in the illumination of public places. All of the lamps waste half of their light in radiation towards the sky. A simple reflector would return it to the ground and double the illumination.

CHAPTER II.

LAMPS OR BURNERS, EMPLOYING THE VOLTAIC ARC.

ELECTRIC lamps are somewhat generally known as "regulators," and are also termed "carbon-holders." The expression "lamp or burner" will, however, be sufficient to distinguish that portion of, or contrivance in, the electric circuit employed as a light-centre.

Burners may be divided under two heads:—(1) Those in which the voltaic arc is caused to exist between the two portions of an interrupted circuit; (2) Those in which a continuous portion of the circuit, being a bad conductor, is heated to incandescence by the passage of the current. It is, however, highly probable that this division, being arbitrary and not generic, may at any time be upset by a new invention based upon principles that do not appear in the lamps at present invented.

It was not until Léon Foucault, experimenting in 1844 with a Bunsen battery, hit upon the idea of substituting retort carbon for common wood charcoal as the substance for electrodes, that the electric light promised to be of use. This opened up a practical application of the light to photographic purposes. The lamp was simply a holder for the carbon rods, and required help from the hand of the operator. Trials of the light were made in the Place de la Concorde, by M. Deleuil, who had previously experimented with carbons placed in a receiver from which the air had been exhausted.

STAITE AND EDWARDS' LAMP.

T. Wright, in 1845, caused the voltaic arc to play between discs of carbon, the origin of Le Molt's apparatus. Staite and W. Edwards, in 1846, introduced a lamp (Fig. 3), in which

FIG. 3.

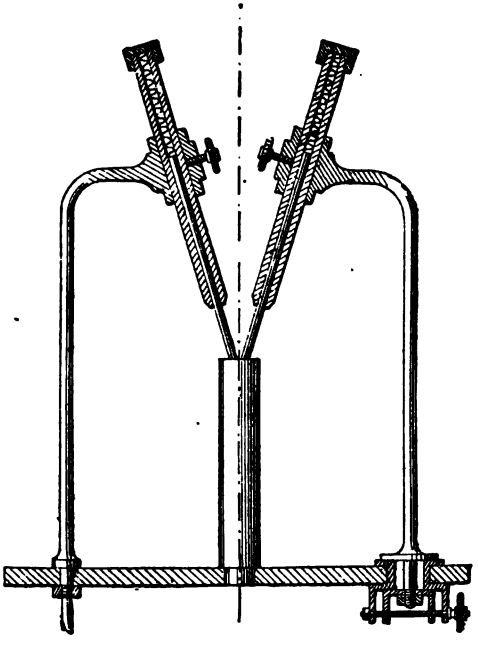

two carbon electrodes are enclosed in small cases, meeting obliquely on a refractory and badly conducting substance. The points are brought into place, as consumed, by springs. A sliding-piece and screw beneath the baseboard enable the length of the voltaic arc to be regulated.

Staite and Petrie, as well as Foucault, in 1848, devised plans by which the current itself regulated the distancing of the carbons. These plans were based upon the phenomena—(1) that an electric current can cause magnetization according to its strength; (2) that the voltaic arc as part of the conductor, reacts upon the current.

LE MOLT'S LAMP.

Le Molt, in 1849, revived Wright's idea. This lamp (Fig. 4) is thus described:—"As electrodes producing the light, I patent the use of all carburetted matter, especially that of retort carbons, and the two combined movements of rotation and approximation, at given intervals, of two discs of variable depth and diameter. The discs are maintained, with regard to one another, in a parallel attitude, vertical or horizontal, or, preferably, in positions at right angles, and conveniently distanced one from the other, to produce the electric light. The discs revolve regularly upon two metal axles, put into connection with the poles of the generating apparatus, and presenting, successively, by the combined rotation and approximation, all the extreme points of their circumferences to the production and emission of the electric light; in such manner that at each revolution of the discs, the latter approach one another by the distance which they had separated by the combustion of part of the carbon, and thus are always replaced in the same position of invariable distance; and as the two movements of rotation and approximation, combined with revolving electrodes, may be obtained with the aid of any kind of mechanical system, it is sufficient that I indicate in my design one of these arrangements, to illustrate how the rotation and approximation may be combined. I reserve to myself the purification of carburized matter forming the electrodes emitting the light, by more or less prolonged immersion in all kinds of acids, and prefer-

Fig. 4.

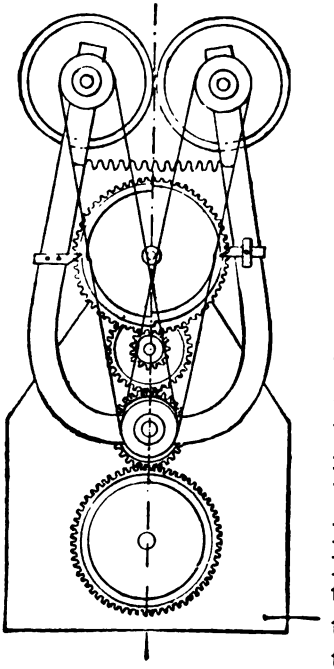

ably in nitric and muriatic acids mixed, and subsequently in fluoric acid."

This lamp allowed of twenty to thirty hours' continuous light; but the intensity of the light must be less than that obtainable with vertical carbon rods.

ARCHEREAU'S LAMP.

Archereau's lamp (Fig. 5) is the basis of many minor ideas, including the Lancaster lamp, and is one of the simplest and most effective of its kind. It consists of a hollow coiled copper wire, with a vertical standard, two carbon carriers, and a counterpoise. The upper carbon is carried by a bar, sliding into and turning at the extremity of an insulated horizontal copper bar, in connection with the negative pole of the electric source. The lower carbon rests on a cylinder, half of copper, half of iron, rising or falling in the hollow bobbin. The positive pole of the electric source is attached to one end of the wire coil, and the other end to the interior cylinder of the coil. A weight counterpoises the lower carbon-holder. When the current passes in the exterior wire, it produces magnetic action, causing the cylinder to descend into the bobbin, interrupting the current. Under these conditions, the action of the counterweight raises the cylinder. Initially, the carbon points must be brought into contact, to establish the electric circuit. When the voltaic arc is formed, the cylinder remains fixed in the coil, and the counterweight is motionless. As the voltaic arc increases in length, and the current is weakened, the lower carbon rises, until the current again attains sufficient power.

FIG. 5.

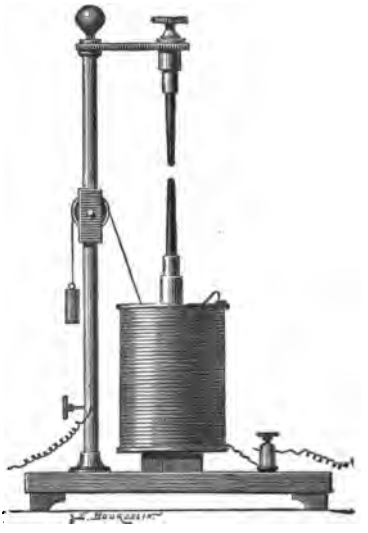

LACASSAGNE AND THIERS' LAMP.

Lacassagne and Thiers, observing the expense and inconvenience attending the employment of clockwork in the lamps previously constructed, substituted a float acting in a bath of mercury. Their patent dates in 1855. A cylinder contained a float upon, and in connection with, the mercury; the carbon electrode rested upon this float. The float was in connection with the positive conductor; the other carbon electrode was fixed in the same axial line above the electrode supported on the float. As the carbon points consumed, so the float rose; but a means of arranging the rise to occur at the proper time was necessary, and was thus supplied. Mercury from a reservoir, having entered the float cylinder, passes through a tube placed in an electro-magnet. In this tube is an india-rubber valve, opened and closed by a soft-iron armature, withdrawn by a spring opposing the action of the electro-magnet. The opening of the valve admits mercury to the float cylinder. As the distance between the electrodes increases, the magnetic attraction decreases, and the valve opens, the incoming mercury raising the electrode.

This lamp was before the Parisian public from 1855 to 1859, and its practical introduction was deterred simply by reason that it was an invention in advance of its time.

WARREN'S LAMP.

A simplification of the preceding burner has been suggested (1878) by Bruce Warren, in which the electro-magnet is omitted. The following is a description of the experimental system:—Ebonite or guttapercha tubes are laid in the same way as gas-pipes in a house, and at suitable places are inserted ebonite taps, which communicate with a reservoir of mercury, on which floats the carbon pencil; the upper carbon is merely suspended by a good conducting substance to the "earth," etc. The system of tubes is connected with a small tank of mercury at the top of the building, which fills the tubes, and acts as conductor and regulator at the same time.

When the taps are open, the mercury completes the circuit, the taps when shut simply breaking the column of mercury. On an experimental scale, glass tubing and a few T-pieces connected with vulcanized rubber tubing answer; a few pinch-cocks serve the purposes of taps. If a tank of mercury is used for each floor of a building, the tanks themselves, which may be of iron, insulated from the walls, may be all connected together with stout copper conductors, so that one generator supplies the electricity for all the carbons. It is better to have a metal tap to regulate the pressure, and an ebonite tap for extinguishing and relighting, so as not to interfere with the resistance of the circuits. An india-rubber washer is placed on the carbon, through which it slips easily, whilst it prevents the mercury from flowing over. The flotation of the carbon, and the cohesion of the mercury, will enable the friction through the washer to be so adjusted that no inconvenience will arise from a column of mercury the height of any ordinary room. For the convenience of replacing the carbons, a 4-way piece, fitted with a pinch-cock at its lower end, so as to empty the branches carrying the carbon, may be used instead of the T-piece.

The accompanying diagram (Fig. 6) illustrates an arrangement which was used as a double-light chandelier. M is a small tank containing a few ounces of mercury; G is a glass tube of small bore, connected with the funnel M and the 4-way piece T by means of small pieces of rubber tubing. This is more convenient than welding the parts together by heat, since it allows the use of pinch-cocks instead of taps. The distance of the ends of the glass from each other in the rubber tubing should be only sufficient, so as to allow the closing of the tubes. As C C′ C″ C‴ are ordinary Mohr's clips, by closing the lower end of T and filling M with mercury, the tube G and arms A A′ are filled with mercury. The clip C being closed and that at C‴ being opened, the mercury in A A′ may be drawn out for

FIG. 6.

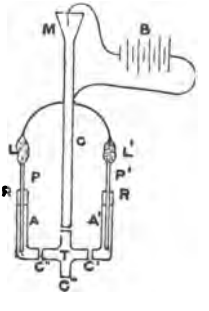

putting in fresh carbons. A wire from a battery, B, dips into the mercury at the funnel M, whilst the other wire from the battery is carried to two pieces of carbon, L L″, lightly suspended over the pencils P P′. The pencils pass through rubber washers, R R′, with slight friction only in the top of the arms A A′. The arms A A′ may be made by simply bending two short pieces of tubing and contracting them slightly at the top. The whole may be readily extemporized by using Hoffman's voltameter, or, preferably, a modification of this, supplied with an opening at C‴. Of course, the stop-cocks would be removed. This lamp arrangement can be fitted up very efficiently for experiment at the cost of a few pence.

A somewhat similar lamp has been shown by F. Higgins.

DUCRETET'S LAMP

Is similar in principle to the preceding. It (1879) consists in the employment of a column of mercury in which one or more carbons are placed. The different densities of these substances causes the carbon to rise to the surface. To obtain the light, a carbon of somewhat larger section than the one immersed vertically in the mercury is placed horizontally, so that the end of the vertical carbon impinges against it. The light obtained is, therefore, similar to the Reynier or Werdermann light. A battery of six to ten Bunsen elements has given good effects. One advantage of this system is that the resistance of the circuit remains almost constant, that portion of the vertical carbon between the level of the mercury and the horizontal electrode forming what may be termed the real resistance of the circuit. It should be noticed, however, that the resistance is not absolutely constant, inasmuch as the carbon being consumed, the level of the mercury will be slightly lowered, and so the resistance is really increased by a constant quantity.

GAIFFE'S LAMP.

This burner returns to electro-magnetic principles. It is enclosed, as regards the mechanism, in a cylindrical case,

A B C D (Fig. 7). A cover, F, easily lifted off, allows of examination of the mechanism, and is clamped by a screw, G. H is the upper carbon-holder, and H′ the lower. I is a racked copper bar, commanding the carbon-holder H, and moves in the interior of a hollow column, J, fixed vertically on the plate A B. This bar terminates in a stop-piece mounted at right angles, to limit the ascending distance. I is a racked soft-iron bar, with a stop-piece, commanding the carbon-holder H′. This bar descends vertically into the interior of the coil *l*.

l, a vertical coil, acting, when the circuit is closed, upon the bar K, which then descends under the influence of the attraction to which it becomes subject.

O, two wheels, toothed and turning freely on the axle N. These wheels are insulated from each other by an ivory disc; their diameters are as 2 : 1. The larger engages with the bar I, and the smaller with the bar K; consequently, when the bar K is raised or lowered to a certain extent, the bar I is raised or lowered to double

FIG. 7.

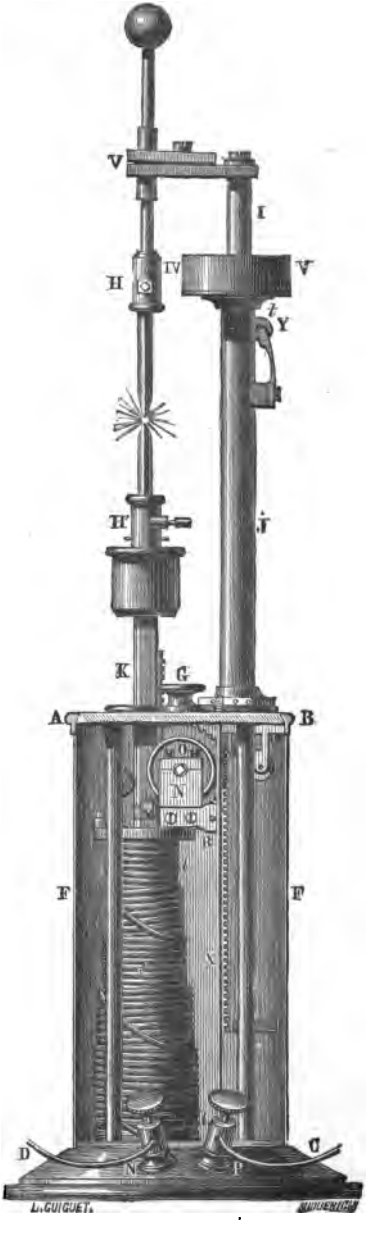

the extent. This arrangement compensates the unequal consumption of the carbons, under the action of a current of constant direction. A barrel, fixed to the wheels O, holds a clock-spring, one end of which is fixed to the barrel itself, and the other to the axle N; this acting spring on the barrel, and consequently on the tooth-wheels, tends constantly to approximate the bars I and K, and with these the carbons.

M is a steel axle, on which the wheels O and the barrel are mounted. This axis is grasped between bearings, which admit of its revolving for the regulation of the barrel-spring. The end of the axle is squared, for the use of a key. The coil *l* is pierced centrally, to allow for passage of the bar K. The pinions R are mounted on an axle, N, and these may be displaced parallel to themselves, to actuate the wheels O, and consequently the bars I and K. By these pinions the luminous arc can be maintained by hand in a given focus, without interrupting the action of the apparatus. V is an adjustable clamp acting on the carbon-holder H. N and P are the negative and positive terminals for the conductors of the electric current. X is a bar conducting the current from the terminal P to the column J. Y is a guide-wheel entering, through a slot in the column J, into contact with the bar I, to insure electric communication. The terminals N, P, and the bar X and column J, are insulated with ebonite.

The current, entering by the terminal P, passes through X, J, I, V, H, H′, K, the coil *l*, to the terminal N. When the circuit is not complete, the carbons are maintained in contact with each other by the action of the spring in the barrel. When the circuit is completed, the coil attracts the bar K, the movement of which, combined with that of the bar J, determines the distance of the carbons and the production of the voltaic arc. That this action occur, it is necessary for the attractive force of the bobbin to be slightly biased in favour of the spring. If the spring is too tense, the two carbons remain drawn together, or are brought too near to give light of sufficient intensity; if not tense enough, the action of the coil predominates, the length of arc becomes too great, and the circuit interrupted.

DUBOSCQ'S LAMP.

Foucault's lamp, as perfected by Duboscq, was for many years *the* electric lamp. Its results were, in fact, second only to those of the Serrin lamp, subsequently introduced. The electro-magnet (Fig. 8) attracts an iron plate at the end of a bent lever. A spiral spring balances magnetic attraction, so that contact is made only under certain conditions of current strength. This spring is attached to a small jockey-lever, which admits of adjustment of the spring, and consequently of the sensitiveness of the lamp. Above the electro-magnet is a clockwork movement actuating two carbon-holders, in gearing with wheels of different diameters. A rocking-bar connects this clockwork mechanism to the armature, and serves as detent to an escapement that arrests the movement

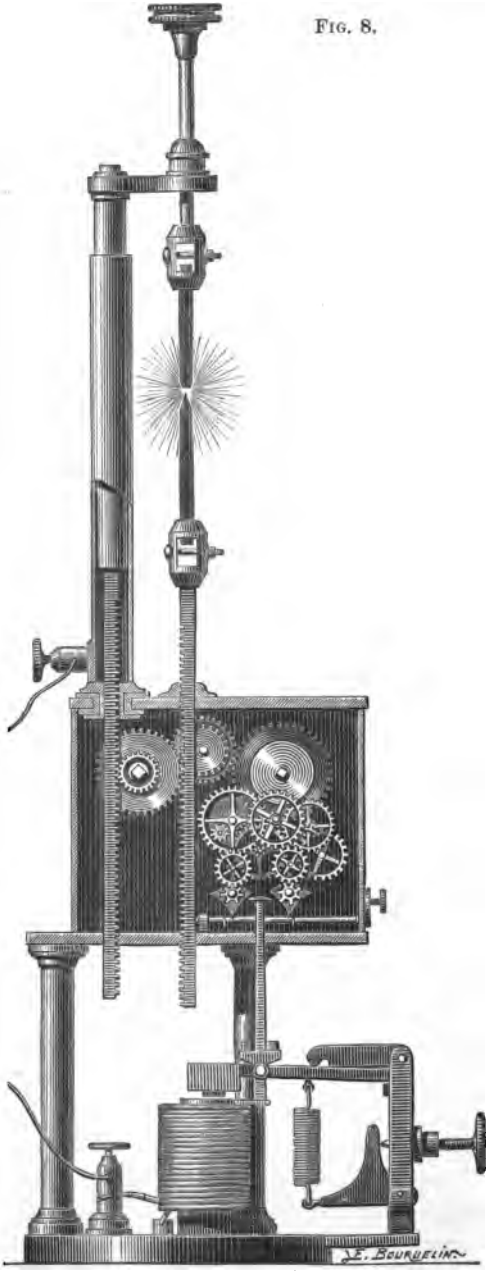

FIG. 8.

of the clockwork when the arc has suitable length. When the arc surpasses a normal length, and its resistance increases, the armature is attracted, and the detent liberates the clockwork.

This lamp has had considerable employment in theatrical displays and in laboratory experiments.

SIEMENS' LAMP.

This lamp has been the subject of considerable trial. Under its original form, it was invented and constructed by Herr von Hefner-Alteneck, who was also the inventor of the Siemens' dynamo-electric machine. This able mechanician succeeded in producing a lamp that, as regard mechanical principles, was at the time of introduction, and for long subsequently, unrivalled; but that had one inherent defect, not unconsidered in the Serrin lamp, namely, want of promptness in action under sudden variations in current strength. This superiority of the Serrin lamp will be apparent when the immediate attraction or direct pull of the electro-magnet in the Serrin lamp is regarded, as compared with the slow movement of separation of the carbons imparted by the to and fro motion of the ratchet and pawl system adopted in the Siemens' lamp. The position of the carbons is regulated, as in the Serrin lamp, by the weight of the upper carbon-holder, which tends to close the carbons together as consumption accrues. The separation is, in the Siemens' lamp (Fig. 9), effected by a small electro-magnetic motor.

The upper carbon-holder, moving freely in a vertical plane, is connected to the lower carbon-holder, by a rackwork and toothed wheels. When the approximation of the carbon rods increases the intensity of the current beyond normal limits, the electro-magnet E attracts the armature A. This armature is withheld by the counter force of the spring f, which also retains the bar T, centred at L, against the stop d. When the electro-magnet overcomes the spring and attracts the armature, contact is established at c; and as soon as the current ceases in the coils of the electro-magnet, the armature

returns to its initial position. The vibrations of the bar *T* are communicated by a pawl and ratchet movement, *s U*, to the carbons, and cause their separation.

When the armature assumes its normal position, a stud, *n*, compels the pawl to leave the teeth of the ratchet wheel, and allows the carbon-holder racks free action.

The velocity of approach of the carbon-holders is regulated by a fly, *w*, actuated by the train *R*. This train is controlled by a ratchet stop, which is not carried forward by the wheel *U*, when the pawl *s* is in action.

If this lamp is to be used with currents alternating in direction, the magnet *E* works in a similar manner, but the oscillations of the armature are produced by the mere change of polarity. A button on the case of the lamp allows of causing the racks to engage with toothed wheels, either in the relation of equal ratios or as 1 : 2. The successful working of this lamp is chiefly due to the employment of one

FIG. 9.

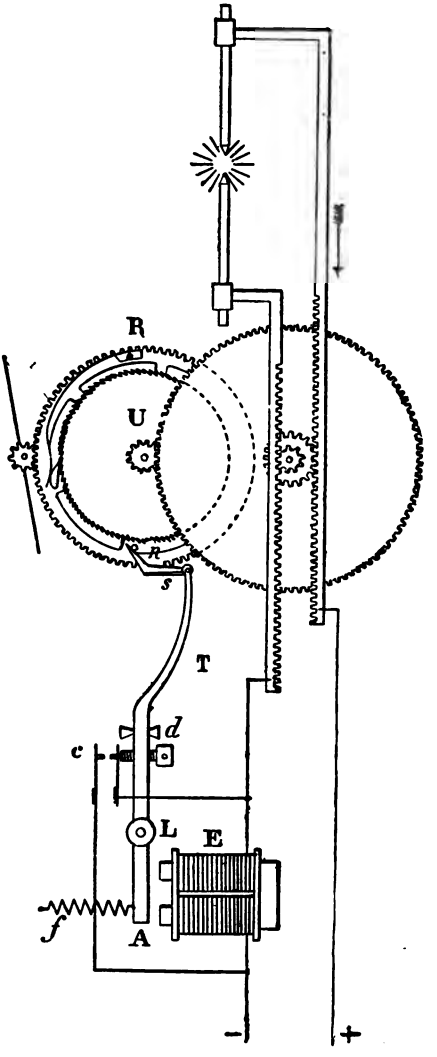

point of support for the armature, instead of two. In the latter case, one point of support corresponds to the period of attraction, and the second to the period of release. There are no clockwork springs in the construction. At the contact only weak sparks appear, consequently there is not much wear.

Various other forms of lamps have been introduced by Siemens, notably a form identical with Rapieff's and Wilde's candle-lamps; but, as the latter inventors appear to have priority of publication, their names have been retained to the apparatus as described in this work.

SERRIN'S LAMP.

This lamp deserves more than honourable mention in the list of apparatus utilized for the production of the electric light. Indeed, the *grand prix* should be awarded it, as it stands as a source of electric illumination, both in date and practicability, before any other system giving results of a nature beyond those of mere experimental or laboratory researches. M. Serrin's lamp has effected for electric illumination what M. Gramme's machine has equally effected as an electric source. These two inventions, from their practical nature, have been the stepping-stones that have enabled other inventors to cross the brook of success, and due merit must be accorded them in any record of inventions in this branch of technology.

For the practical production of the electric light, in any electric lamp dependent upon the production of the arc as a source of light, it is first necessary that the carbon points should be in contact. When the circuit has been thus established, the points must be separated to a distance sufficient to produce a constant arc. The lamp must be arranged to bring the carbon points together as they are consumed, either under the influence of atmospheric combustion or conveyance of the electric current. M. Serrin's lamp satisfies these conditions, in the simplest manner consistent with the employment of mechanism. This lamp (Fig. 10) consists of an electro-magnet A, bars B and C, armature D,

Fig. 10.

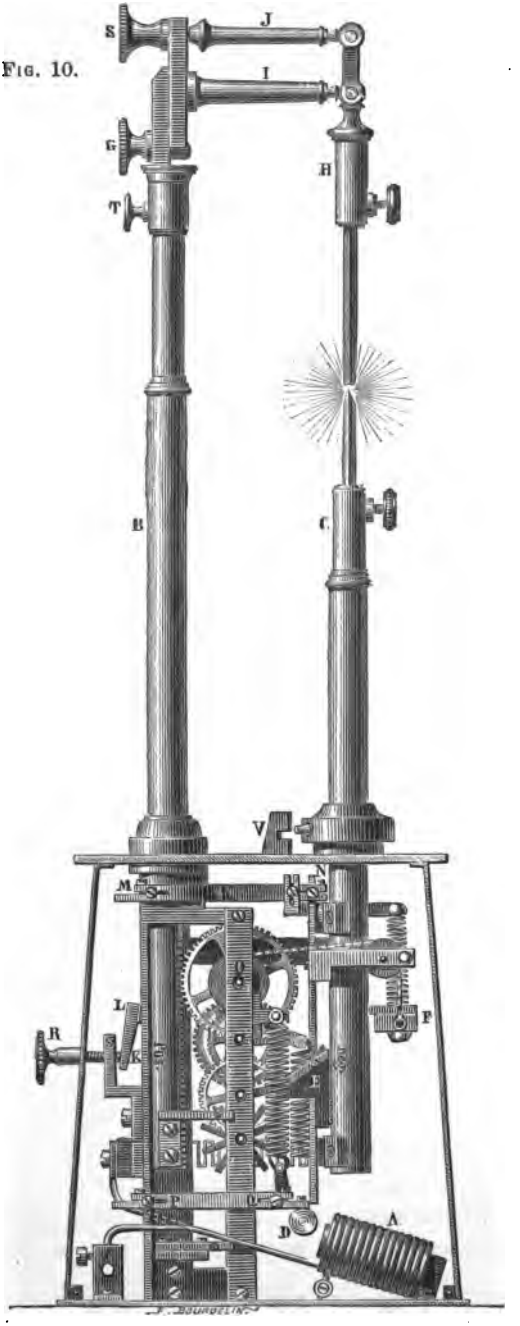

stop-piece E, spring F, eccentric G, positive carbon-holder H; tie-pieces I and J, the one fixed, the other adjustable; tension lever K L; a double parallelogram M N P Q, with clockwork movement O, and adjusting screws R and S; a binding screw T, an ivory stop V, in use only when the lamp is out of action.

The positive carbon is held above the negative carbon by a massive bar. The following description is related to the various actions of the lamp, which, of course, in practice occur nearly synchronously. The approximation of the carbon points occurs by the positive carbon-holder tending to descend vertically under its gravitating action. At its lower end the holder has a rack, engaging with a toothed wheel O, communicating motion to the train. On the same arbor is a pulley, of diameter half that of the wheel. A smaller pulley and a linked chain communicate motion to this larger pulley; the chain is attached to a standard, F, forming part of the negative carbon-carrier. By this multiplying arrangement the amount of motion given to the negative carbon-holder is half that of the positive holder, which compensates for the inequality in consumption of the two carbons under the action of a constant current.

The rate of descent of the positive carbon is regulated by a fly and train of wheels, in connection with which is a radial wheel acting as a detent.

The requisite distance between the carbon points is attained by a somewhat complicated piece of mechanism. The vertical side M Q of a double-jointed parallelogram is fixed, two other sides M N, P Q, have horizontal motion, and to the side N Q is connected a soft-iron armature D. The effect of gravitation of the upper carbon-holder upon the parallelogram is counterbalanced by two springs, one on the lower horizontal side, and the other on the movable vertical side of the parallelogram. The tension of the latter spring can be adjusted by a thumb-screw, R, acting upon a bent lever, L K. A is an electro-magnet. The positive pole of the electric source is connected direct to the body of the apparatus, and the electric current passes from the upper carbon to the lower carbon,

thence by the holder and insulated conductor S to the electro-magnet, which is at the other end of its coil, in connection with the negative pole of the electric source. The electro-magnet overcomes at a given moment the tension of the springs, causing, by its attraction upon the soft-iron armature, the parallelogram to descend, and with it the negative carbon. The vertical movable side of the parallelogram carries a jockey, E, which, as it descends, enters between the arms of the radial wheel, detaining the movement of the train of wheels, and consequently of the racks.

When the current enters the apparatus, the electro-magnet becomes excited, attracts the armature, draws down the parallelogram and lower carbon, the point of which is separated from that of the upper carbon. As the carbons are consumed or separated, the current becomes weakened, a reverse action takes place, and the carbons are brought together by the weight of the upper holder and train of wheels, which are allowed to come into play by the raising of the detent.

These actions constantly occurring or being balanced, a constant voltaic arc is maintained, and with chemically pure carbons and regular electric source, a light may be obtained as steady as that of a gas-burner.

CARRÉ'S LAMP.

M. Carré introduced, in 1875, an improvement in Serrin's lamp, by employing a double solenoid instead of an electro-magnet, with an S-shaped armature, oscillating around a pivot at its centre, the two ends entering a curved bobbin. When the current is interrupted, the armature is withdrawn by springs, a detent releases the mechanism, and the carbons come into contact, the mechanism being driven by the weight of the upper carbon-holder. When the circuit is complete, the armature ends are sucked into the solenoid, and separation of the carbons results. The lamp does not appear to have met with extended application.

LONTIN'S LAMP.

M. Lontin's improvement upon the Serrin lamp consists

in substituting for the electro-magnet a metallic bar, so arranged that its expansion under the heat produced by the passage of the current through it, causes the separation of the carbon points. Although carried out to great perfection in its results, details of this lamp have not been published, and it is still, we believe, considered as being under trial by its inventor.

In another improved form, M. Lontin inverts the action of the Serrin lamp, causing the current to be interrupted where, in the ordinary form of lamp, it was continuous. The inversion will be readily understood from consideration of the illustration of the Serrin lamp.

M. Lontin has also introduced a form of lamp in which the action of gravity is dispensed with, and allowing of any length of carbon being employed. This lamp is shown in Fig. 11, in which clockwork or an electro-magnet causes a bar,

FIG. 11.

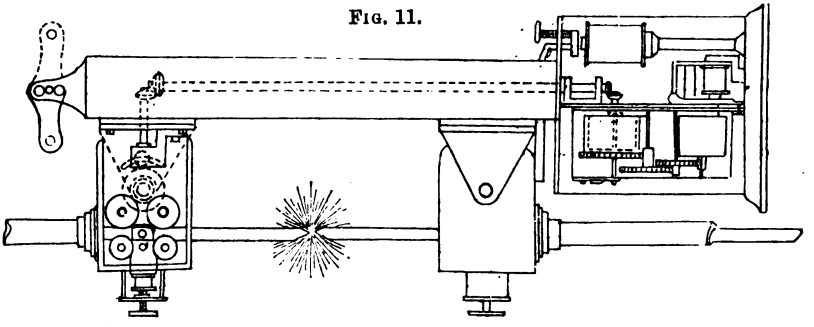

running parallel with the carbons, to revolve. The motion is imparted by bevelled wheels to others which cause the carbon-carriers to revolve, and to carry the carbons gradually forward. The carriers hold the carbon about two inches from the end of the carbon point, reducing the resistance to that due to this length of carbon, instead of giving the resistance due to the whole length of carbon, as in many systems. This lamp is arranged to work horizontally, but this arrangement is not to be considered an advantage, for experiments have shown that horizontal carbons, placed end to end, give at least 30

per cent. less light than the same carbons so placed vertically. The cause has not been explained.

GIROUARD'S LAMP.

This lamp (1876) consists of two parts—the actual lamp, with a clockwork movement for approximating and separating the carbons; and a kind of relay or regulator, placed near the lamp, and actuated by means of a portable constant battery. These two apparatus have distinct circuits, that upon which the relay is placed controlling the advancement and withdrawal of the carbons. The lamp, from its complication of secondary relay mechanism, has not met with general application.

WAY'S LAMP.

Professor Way, in 1856, devised a lamp in which the carbons were replaced by a fine stream of mercury running from a small funnel, and falling into an iron capsule. One pole of the electric source was put in connection with the funnel, and the other with the capsule. The intensely heated liquid vein was enclosed in a glass chimney of narrow dimensions, to prevent condensation of the mercurial vapours, and as the combustion was thus effected out of contact with atmospheric oxygen, oxidation of the metal did not occur. As with all mercurial lamps, great danger arises from volatilization of the mercury, the inventor himself, in this case, falling a victim to the poisonous action.

THOMSON AND HOUSTON'S LAMP.

Having been engaged in an extended series of experimental researches on dynamo-electric machines, and their application to electric lighting, the attention of Professors Houston and Thomson was directed to the production of a system that will permit the use of a feebler current for producing an electric light than that ordinarily required; or, in other words, the use, when required, of a current of insufficient intensity to produce a continuous arc. At the same time, the system should permit the use of a powerful current, in such a manner as to operate a considerable number of electric lamps placed

in the same circuit. As is well known, when an electric current, flowing through a conductor of considerable length, is suddenly broken, a bright flash, called the extra spark, appears at the point of separation. The extra spark will appear, although the current is not sufficient to sustain an arc of any appreciable length at the point of separation.

In this system, one or both of the carbon electrodes are caused to vibrate to and from each other. The electrodes are placed at such a distance apart, that in their motion towards each other they touch, and afterwards recede to a distance which can be regulated. These motions or vibrations are made to follow one another, at such a rate that the effect of the light produced is continuous; for, when flashes of light follow one another at a rate greater than twenty-five to thirty per second, the effect produced is that of a continuous light.

In practice, instead of vibrating both electrodes, it was found necessary to give motion to but one; and since the negative electrode may be made of such size as to waste very slowly, motion is imparted to it, in preference to the positive. The carbon electrodes can be replaced by those of various substances of sufficient conducting power. The following is a description of one of the forms of electric lamp devised to be used in connection with this system of electric lighting:—

A flexible bar, *b*, of metal (Fig. 12) is firmly attached at one of its ends to a pillar *p*, and bears at its other end an iron armature, *a*, placed opposite the adjustable pole-piece of the electro-magnet *m*. A metal collar, *c*, supports the negative electrode, the positive electrode being supported by an arm, *j*, attached to the pillar *p*. The pillar *p* is divided, by insulation at *i*, into two sections, the upper one of which conveys the current from the binding-post, marked +, to the arm *j*, and the rod *r*, supporting the positive electrode. The magnet *m* is placed, as shown by the dotted lines, in the circuit which produces the light. The pillar *p* is hollow, and has an insulated conducting wire enclosed, which connects the circuit-closer *v* to the binding-post, marked —. The current is conveyed to the negative electrode, through *b* and the coils of the magnet *m*. When the electrodes are in con-

tact, the current circulating through *m* renders it magnetic and attracts the armature *a*, thus separating the electrodes, when, on the weakening of the current, the elasticity of the rod *b* again restores the contact. During the movement of the negative electrode, since it is caused to occur many times per second, the positive electrode, though partially free to fall, cannot follow the rapid motions of the negative electrode; and, therefore, does not rest in permanent contact with it. The slow fall of the positive electrode is ensured either by properly proportioning its weight, or by partly counterpoising it. The positive electrode thus becomes self-feeding. The rapidity of movement of the negative carbon may be controlled by means of the rigid bar *l*, which acts, practically, to shorten or lengthen the part vibrating.

FIG. 12.

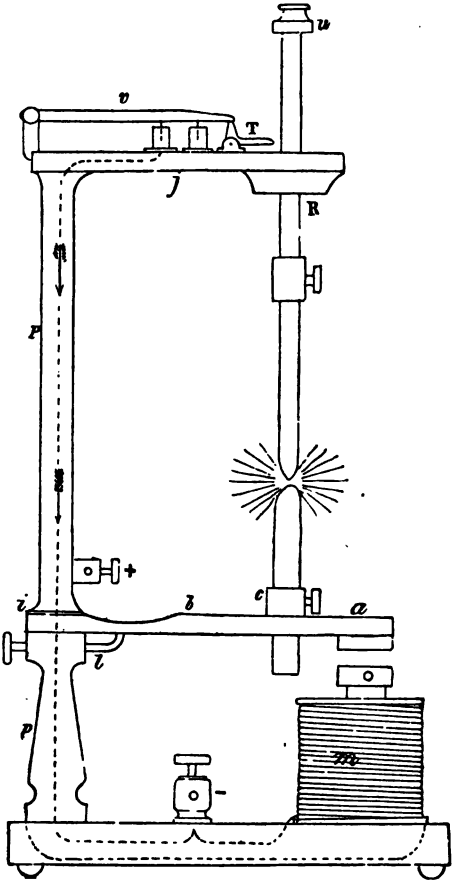

In order to obtain an excellent but free contact of the arm with the positive electrode, the rod, made of iron, passes through a cavity filled with mercury, placed in electrical contact with the arm. Since the mercury does not wet the metal rod, or the sides of the opening through which it passes, free

movement of the rod is allowed without any escape of the mercury. This feature could be introduced advantageously into other forms of electric lamps.

In order to prevent a break from occurring in the circuit, when the electrodes are consumed, a button, *u*, is attached to the upper extremity of the rod *R*, at such a distance that when the carbons are consumed as much as is deemed desirable, it comes into contact with a tripping lever T, which then allows two conducting plugs, attached to the bar *v*, to fall into their respective mercury cups, attached, respectively, to the positive and negative binding-posts by a direct wire. This action practically cuts the lamp out of the circuit.

REYNIER'S LAMP WITH CONTINUOUS CIRCUIT.

If a very intense current of electricity is led through a resisting and refractory conductor, such as a pencil of carbon, the temperature of this conductor rises to a dazzling white heat, and it then emits a vivid light. The principal difficulty to be overcome is to limit the undue waste of the luminous conductors—a waste which is very rapid, even in an enclosed space, on account of the volatilization and disaggregation of the carbon pencils, and greatly accelerated in the open air, by the rapid combustion of the incandescent carbon. In the various systems of electrical lamps with continuous conductors, the renewing of the carbon points is performed in the following manner:—The incandescent pencil is placed in the circuit with fixed contacts, and remains until the circuit is broken by the carbon being consumed; the light is then extinguished. The current now suddenly passes from this carbon to another, which is consumed, the circuit broken in its turn, and so on. This method is open to many objections: there is an interruption of the current, accompanied by an extinction of the light, at every rupture of the pencil; the luminous intensity varies continually on account of the gradual thinning of the carbon; the conductor only gives its maximum of light at the moment next to that of rupture; finally, the proposed apparatus can scarcely work, except in an hermetically closed space.

In Reynier's system the renewal of the carbon is progressive. The carbon, incandescent a part of its length, advances almost continuously, till the whole available part has been consumed. This system can operate in the open air. The following is the principle:—A cylindrical or prismatic pencil of carbon forms part of an electrical circuit, continuous or alternate, sufficiently intense to render this part incandescent. The current enters or leaves at the point of contact (Fig. 13); it leaves or enters at the lower contact wheel. The upper contact, which is elastic, compresses the pencil laterally; the contact wheel touches it at its end. Under these conditions, the carbon is consumed at its extremity more quickly than at any other place, and tends to diminish in length. Consequently, if the carbon is steadily forced in the direction of the arrow, it will gradually advance as it is consumed, sliding through the lateral contact, so as to press continuously on the contact wheel. The rotation of this wheel is made dependent on the progressive movement of the carbon, so that the weight of the latter, exerted at its end, acts as a brake on the mechanism of the motion.

FIG. 13.

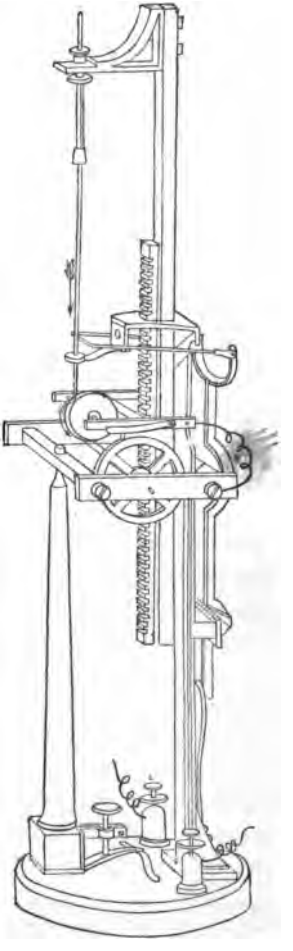

This apparatus gives a clear white light with four Bunsen elements; with a more powerful electrical source, several lamps of this system may be operated. With a battery of thirty-six elements, grouped in two series of eighteen each, four lamps have been placed in a single circuit. Each of the four lamps could be extinguished and relighted individually, the three others

continuing unaffected. Light has been obtained from one of these lamps by means of the current of a small Gramme machine, worked with treadle, as employed for the laboratory. Finally, a fine light has been obtained with a battery of three Planté (secondary) elements, which were charged during the afternoon at the establishment of M. Bréguet, and carried charged to the hall where they were exhibited. M. Reynier remarks that this experiment may be considered as a step towards the application of the electric light to domestic purposes.

In the most recent arrangement of this lamp, the revolution of the turning contact is obtained from the tangential component of the pressure of the carbon pencil on the circumference of the disc; thus, the end of the pencil never leaves the revolving contact, and all causes of irregularity in the light are obviated.

The brake for retarding the progress of the carbon rod is operated in the following manner:—The contact wheel is carried by a lever; the pressure exerted by the carbon on the wheel causes a shoe to press on the face of a wheel, which is revolved by means of the weight of the heavy rod, through its rack and the pinion.

Accordingly, as the point of the luminous conductor presses more or less heavily on the disc, the brake will retard, more or less, the descent of the heavy column, which occurs at almost inappreciable intervals.

THE WERDERMANN LAMP.

The arrangement of this lamp will easily be understood from Fig. 14. A block of carbon is connected to the negative pole of the electric source, the positive pole being connected to the carbon rod, some three or four millimetres in diameter, and of any desirable length. The carbon rod is kept in contact with the block by means of a weight and a cord passing over a pulley. The whole arrangement is exceedingly simple. The method of arranging the lamps in circuit is that known as the multiple-arc system, used to

so great an extent in every branch of electricity, in which, if we suppose the two conductors from the source of electricity to be led away in parallel lines, the lamps will be conductors connecting these lines. The experiments with this lamp, at the time of going to press, have not been publicly detailed, but there seems to be a large field for a system so simple in construction.

FIG. 14.

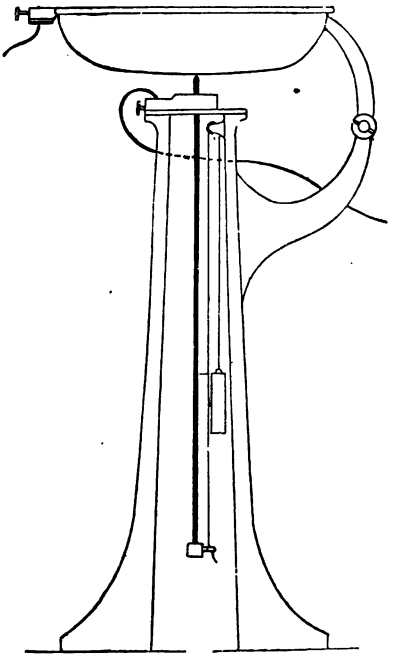

It might be argued that this is a lamp in which illumination is due to incandescence of the carbon simply, but M. Werdermann contends that repulsion between the carbon rod and disc gives a small arc, which adds greatly to the brilliancy of the light.

With a 2 h.-p. Gramme plating machine ten lights of 40 candle-power each have been maintained on this system, or two lights of 320 candle-power each. The loss of light, by subdivision, increases therefore far more rapidly than in proportion to the number of lights introduced, as might be expected from calculation. But the loss is not sufficient to confirm certain theories, in which it is held that the light would decrease inversely as the square of the number of lamps introduced into the circuit, or rather of multiple circuits added.

RAPIEFF'S LAMP.

The principal feature of M. Rapieff's lamp consists in the multiple nature of one or both carbon electrodes. Instead of employing, as in most electric lamps, a carbon rod placed

vertically and in the same axis with another carbon rod, M. Rapieff substitutes for the single rod two others, each of half the sectional area. These rods are inclined to one another at an angle of about 20°, and meet in V form. The electric arc is produced between the upper and lower pairs of carbons. The position of the carbons is determined by the intersection of the two straight lines or axes of the carbon rods, so that a constant length of arc is necessarily consequent, whatever may be the rate and irregularity of consumption. Each carbon rod moves freely between guides in the direction of its length, and is drawn through these guides by a cord and weight, to form the apex of the V with the other rod. The motion forward is stopped by the two carbons impinging against each other. The plane of the upper pair of carbons is at right angles to that of the lower pair. Fig. 15 illustrates a lamp of this construction, and is shown with the carbons in the position they would occupy when the current is interrupted. Under this condition, the lower pair is kept in contact with the upper pair by the action of a light spiral spring situated in the base of the apparatus, and acting through a vertical rod passing up one of the pillars. To the free end of each of the carbon rods is attached, by a screw

Fig. 15.

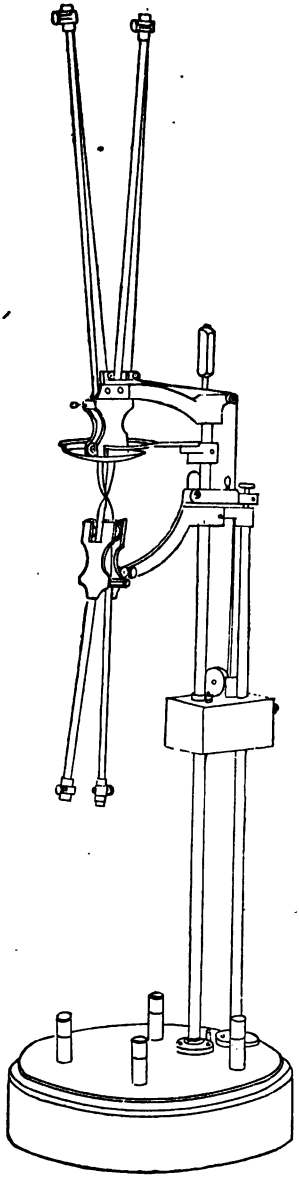

clip, a silk thread, which, passing over pulleys, is attached to a rectangular weight, sliding vertically up and down the two pillars. The action of this weight is to draw the carbon pairs together. When the lamp is put in circuit, and an electric current is established, the lower pair of carbons is drawn away from the upper by the action of the electro-magnet concealed in the base of the lamp. Fig. 16

FIG. 16.

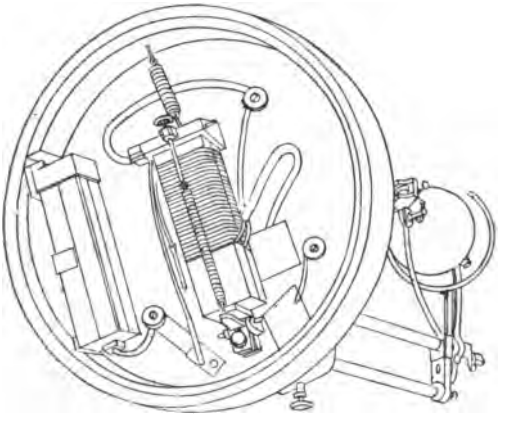

represents the base of the lamp as seen from beneath, and shows the electro-magnet and its accessories. This apparatus consists actually of two electro-magnets, one of which is fixed, while the other is hinged so that the passage of the current through the coils causes the hinged magnet to approach the fixed one, and thus to lift the sliding rod that passes up the vertical pillar of the lamp, at the same time separating the carbons. The spiral spring withdraws the shifting electro-magnet when the current ceases or become weakened.

The base or stand of the lamp contains also another apparatus, consisting of an automatic shunt, which throws into the circuit a resistance equivalent to that of the arc, when, through any cause, the lamp is extinguished. By

means of this apparatus, the brilliancy of the other lamps in circuit is unaffected by accidental or intentional extinguishing of the remaining lamps. When the arc ceases to exist, the current ceases to pass through the coils of the electro-magnet, and this, losing its attractive power, releases the armature, which is drawn back by a spring. The armature carries a contact-piece, which, when the armature is released, falls against a fixed contact-piece, and introduces into the circuit an "artificial resistance" of carbon attached to this latter contact-piece.

The lamp thus described has been in practical and public use at the office of the *Times* newspaper. In this case as many as six lamps have been ignited on a single circuit; but details of cost and power expended have not been published.

FIG. 17.

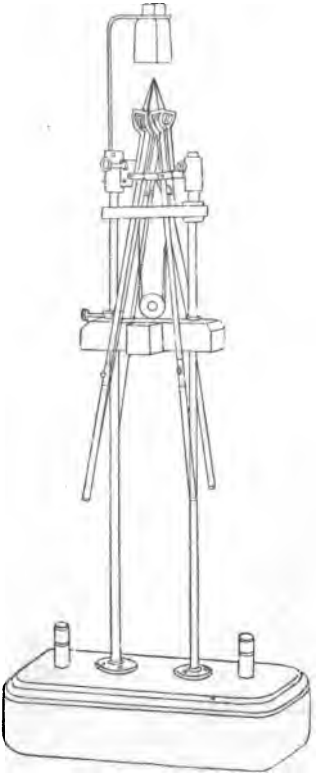

Fig. 17 represents another form of the Rapieff lamp. In this case the two pairs of carbons are arranged side by side, instead of being placed vertically above each other. Above the arc is a cake of lime, which serves to reflect the rays, as well as to increase the illuminating power, by preventing radiation.

Either of these lamps can be employed with currents of single or alternate direction. In one instance, the pairs of carbons are equally consumed; in the other, the positive carbons have to be made twice as long as the negative carbons. At all times, the point of intersection of the axes of the carbons, and consequently the length of arc, must remain constant.

BRUSH'S LAMP.

One of the simplest and apparently most efficient lamps is due to American invention. It is illustrated in Fig. 18. A is a helix of insulated wire, in the form of a tube or hollow cylinder resting upon an insulated plate, A′, upheld by a metallic post or standard. Within the cavity of the helix A is contained the iron core C and the rod B, which passes loosely through the core C. The core C is also made to move very freely within the cavity of the helix A, and it is partially supported within the cavity by the springs, whose tension is regulated by the set screw. These springs push upward against ears attached to the core C. D is a brass ring. One edge of this ring is over a lifting tongue, which is attached to the core C, while the opposite edge of the ring is a short distance below the crown of an adjustable set screw, D′.

FIG. 18.

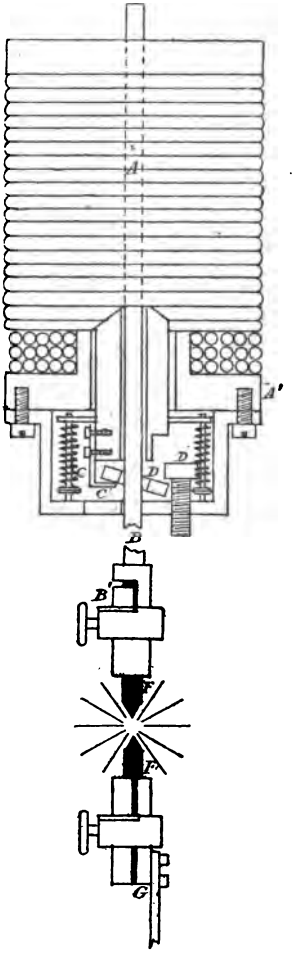

The upper standard is fastened to a suitable base, to which is also attached the mechanism for holding the lower carbon F. This mechanism consists of a support, G, terminating in a part similar in construction to the part B′. The lower part of this support is bent at a right angle and rests upon the base, and is fastened by a thumb-screw. It is necessary that the carbons, F F, should present in accurate opposition to each other, and to accomplish this the set screw is made to pass through a hole in the support G, considerably larger than the shaft of the set screw.

If one pole of a battery or other source of electricity be attached to the support G, while the other pole is connected to the upper support, the electric current passes from the latter through the helix A, rod B, and carbons F, F, down to the support G, thus completing the circuit. The core C, by force of the axial magnetism thus created, is drawn up within the cavity of the helix, and by means of the finger C′, lifts one edge of the ring D, until, by its angular infringement against the rod B, it clamps this rod, and also lifts it up to a distance limited by the adjustable stop D′. While the ring retains this angular relation, the rod B will be prevented from moving.

While the electric current is not passing, the rod B can slide readily through the loose ring D and the core C, and in this condition the force of gravity will cause the upper carbon to rest upon the lower carbon. If a current of electricity is passed through the apparatus, it will effect the lifting of the rod B, and separate the carbons, thus producing the electric arc.

The tension of the springs is so adjusted that they, together with magnetic attraction of the helix, shall be just sufficient to support the core C, rod B, and carbon F, in the position for producing the arc. As the carbons burn away, increasing the length of the arc, the electric current diminishes in strength, owing to the increased resistance. This weakens the magnetism of the helix, and the core, rod, and carbon F are moved downward by the force of gravity, until the consequent shortening of the voltaic arc increases the strength of the current, and stops this downward movement. After a time, however, the clutch-ring D will reach its floor or support, and its downward movement will be arrested. Then any downward movement of the core C, however slight, will at once affect the rod B, allowing it to slide through the ring D, until it is arrested by the upward movement of the core C, due to the increased magnetism.

In continued operation, the normal position of the ring D is in contact with its lower support, the office of the core C being to regulate the sliding of the rod B through it. If, however, the rod accidentally slides too far, it will be instantly

and automatically raised as at first, and the carbon points thus continued in proper relation to each other.

With this lamp, and the machine also designed by Mr. Brush, as many as 16 to 18 lights of 2000 candle power each have been maintained upon a single circuit. With 27 lamps in circuit, upon an experimental trial, the aggregate light was about 10,000 candles; while, with 16 lamps in circuit, the total light was from 30,000 to 35,000 candles, with an expenditure in the latter case of 13·85 horse power. These are results unattained at present by any other system, and are worthy of record, as being performed under the care of highly reliable engineers.

THE WALLACE-FARMER LAMP.

This lamp (Fig. 19) has a peculiar feature. In it no carbon rods are employed; but the carbons take the form of two plates, each about nine inches long and three inches broad, the upper or positive plate being double the thickness of the lower plate. The lower plate is fixed, but the upper plate slides in a grooved frame. Above the frame an electro-magnetic apparatus provides for the separation and contact of the plates, as the strength of the current may regulate. The arc, always seeking the position of least resistance, shifts from one end of the plates to the other. This peculiarity, whilst it gives great continuity of action, renders the lamp useless for purposes where a fixed position is required for the light, as in lighthouse illumination.

FIG. 19.

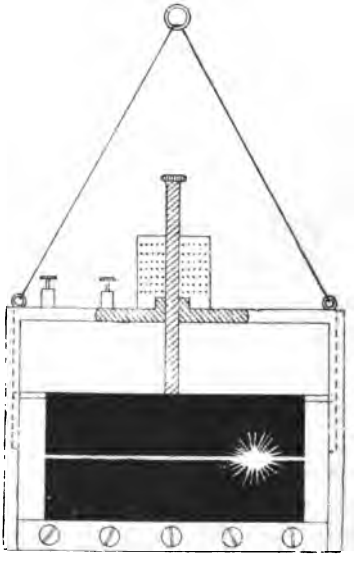

The carbon plates of the dimensions given are stated to

last for 100 hours, in conjunction with the current from a Wallace-Farmer machine, with six other lamps in circuit. The intensity of the light afforded, and power expended, have not been detailed publicly.

THE KRUPP LAMP.

This lamp, invented by Baron von Krupp, includes the application of a brake for the automatic regulation of the distance between the two carbon points. A fan or fly revolves in quicksilver, for the purpose of regulating the motion of the carbon-holder, this part of the apparatus being designed as a substitute for clockwork. A magnetic coil, with iron casing and iron bottom, is employed in connection with the brake. Fig. 20 is a side elevation, and Fig. 21 a front elevation of the lamp. A is the holder for the positive carbon, and B the holder for the negative carbon. The upper holder A is suspended from the pulley C by a jointed chain, the lower holder B being similarly attached to a pulley, D, half the size of the former. When the holder A descends a certain distance by its weight, the other holder, B, ascends half the dis-

Fig. 20. Fig. 22. Fig. 21.

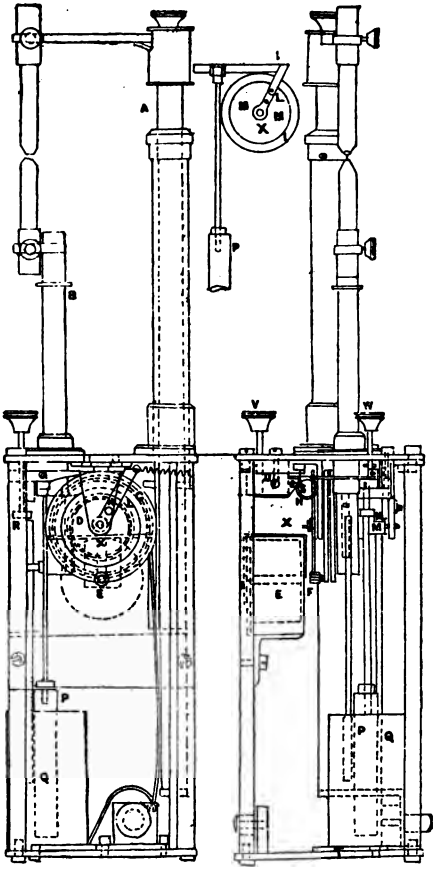

tance. Accordingly, the electric arc formed between the carbon points occupies a fixed position. As the weight of the upper holder A must not be too small, because its motion would be easily influenced by dust and dirt, it is necessary to have a brake for retarding and regulating its course or travel. For this purpose a fly or fan, E, revolves in mercury. On the spindle of this fly there is a pinion, F, gearing with a tooth wheel, G, on the spindle X of the chain pulleys C and D. In order that the fly E, by the insertion of a fresh carbon, may not revolve backwards, the tooth-wheel G is fitted with a pawl wheel, H.

Fig. 22 is a separate view of the brake acting on the disc I. The brake consists of two parts, K and M, which are jointed together at L. The lower part, M, can turn on the spindle X, and has a hole, M′, in which is inserted a small peg, N (Figs. 20 and 21). The peg is loose in the hole, and the backward motion of the brake is limited by it. O is a brake block in the upper part, K, of the brake. P is the keeper for an electro-magnetic coil, Q, and this keeper is suspended by a brass rod from the other end of the part K.

When the lamp is in action, the keeper P is drawn into the coil Q, and the brake block O is pressed against the disc I, turning the latter in its further movement downwards, so far as the set screw R (Fig. 20) will allow. Thus, the upper carbon point will be raised, and the lower carbon point lowered, and the electric arc make its appearance. As the carbon points gradually consume away, the current becomes weaker, and its effect on the electro-magnet Q is lessened. The brake K, supported by the spring S (the action of which can be regulated, in proportion to the strength of the current, by the lever U and set screw V) and by the weight of the carbon-holder, moves slowly back. The brake disc I is enabled to turn forward, and the carbon points to approach each other. When this movement has proceeded as far as the brake disc I moved back before, the lower part of the brake bears against the peg N. By further weakening of the current, the brake now turns in its joint at L, the brake block O releases the disc I, and the carbon points move towards

each other; the current is strengthened, and the brake is again applied to the disc I, either simply to hold it when the carbon points are in their right position, or to pull it back when the carbon points are too close together. When inserting new carbons, the brake is fixed by the set screw W, and work is arrested. The electro-magnetic coil Q rests on the bed-plate T of the lamp, and is surrounded by an iron casing, by which its power of attraction for the keeper is increased.

The fixed position of the arc provides for keeping the light in the centre of a reflector. The lamp may be simplified by leaving out the moving parts for the lower carbon-holder. The lamp has been employed by Von Krupp in portions of his factory at Essen, in Germany, and the results have been so satisfactory that the light is being extended to other parts of the establishment.

HIGGS' LAMP.

With considerable experience in the practical manipulation of most of the existing systems for electric lighting, the author has found that some systems presented considerable, and that others of more delicacy of adjustment necessary to practical employment gave insuperable, difficulties. These difficulties arise chiefly from three causes: that the carbons are not homogeneous, the current inconstant from variations in the resistance of the circuit, and generally from the want of promptness in the mechanism of the lamp to respond to the variations so caused. Most of these electrical apparatus have been devised either with too broad or imperfect views, or with only special application. In the case of carbon-holders carrying seven or eight inches of carbon to be consumed, the resistance of this amount of carbon, if the material is not of the highest quality, is likely to exceed that of the arc and lamp itself *ab initio;* and this resistance, constantly varying, has to be compensated for by the mechanism of the lamp. This imperfection has been avoided by Rapieff, Werdermann, and Lontin. Some inventors have recognized it, and have proposed, as a remedy, to electrotype the carbon

rods with a conducting metal; but the practical electro-metallurgist is cognizant of the difficulty of obtaining regularity in such deposits of metal, and the expense of the coating is, besides, to be taken into account. In each case the long length of carbon becomes heated, and with coppered carbons the mass of metal is insufficient to carry away the heat generated by the passage of the current.

The first aim of the electrician who has to maintain an efficient and steady light is undoubtedly to obtain as constant a current as is possible with either battery or electric machine. Battery currents vary, as a rule, very gradually; currents produced by mechanical motion are subject to the irregularities of that motion. The slip of belting, the beats due to want of balance in the fly-wheel, are represented in the electric current with too much fidelity for the comfort of the electric-light engineer. But with care these causes of irregularity can be avoided, and the needle of even a delicate galvanometer, interposed in the circuit of a well-set machine, driven by a steady motor, will remain fixed at a degree of deflection representing the current strength.

But this steadiness vanishes immediately the electric lamp is introduced into the circuit, so far as the lamp is concerned. This occurs partly because the lamp is, as regards the light it emits, a much more delicate current measurer than the galvanometer. The light power from the carbons of an electric lamp depends not directly upon the current strength, but increases or decreases far more than proportionally. The heat produced by the current varies as the square of the current strength, and the light varies in some such ratio as regards the heat. Thus, a variation in current intensity, measured by the number 2, may be considered in illustration as causing a variation of 16 in the light intensity. It is, therefore, needful to avoid causes of variation in the lamp, for these, it is evident, will have similar effect upon the light intensity to those arising with the machine. Indeed, variations introduced by the lamp cause variations to occur from the machine, unless the latter be extremely well governed. A decrease of resistance in the circuit causes more work to

be thrown upon the motor, and *vice versâ*. If the motor, in consequence, momentarily slackens or increases speed, there must elapse several moments before the same conditions as existed before the disturbance are again established, and the largest of these variations are certainly visible as variations in the light. That most of these variations are due to reaction from variations in the lamp itself, is proved by the superior steadiness of the light produced on the principle of incandescence alone. This fact has caused many inventors to overlook the cost of the light produced merely by incandescence, and to avoid in their lamps the use of the voltaic arc, with what appears to be its necessarily attendant irregularity.

The lamp illustrated in Fig. 23 is an attempt to avoid as much as possible causes of irregularity, and at the same time to produce a light with small expenditure of power. It utilizes the principles of incandescence, of the arc, and of the extra spark. It consists of an electro-magnet, in face of which is an armature mounted on a spring. The armature carries a block of carbon, iron, or compounded material as a negative electrode, which is not consumed, or is consumed with extreme slowness. The positive electrode is a carbon rod, carried in a tube and falling with a certain friction imposed by a weighted lever, which admits carbon rods of several sizes to be introduced, as may be best suited to the strength of the current. The falling of the carbon can be aided by a weight or spring. The distance of the bottom of the tube from the negative electrode can be adjusted, and limits the length of carbon rod rendered incandescent by the current. When the current passes, through the positive carbon coming into contact with the negative electrode, the armature is attracted, and the voltaic arc and extra spark appear; the current, weakened by this action, fails to keep the armature attracted, and in this manner a constant vibration of the negative electrode is established. This vibration is imperceptible to the eye. Its advantage, beyond that of producing the extra spark, which spark itself appears to afford aid in maintaining the voltaic arc, is that the armature has

no dead point, and floats as it were above the electro-magnet, in a condition to respond promptly to magnetic effects caused by larger increments or decrements of current strength.

FIG. 23.

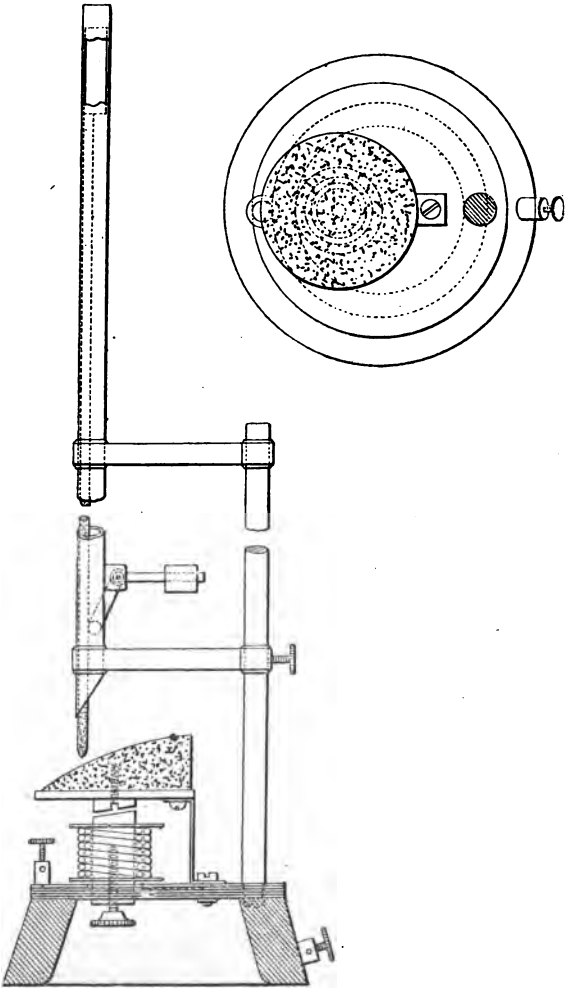

It is preferable to place an insulated spring between the end of the friction-lever and the armature, instead of the

weight on the end of the lever; the carbon rod is then allowed to fall freely when required, and as released by the rising of the armature.

With only four ordinary Bunsen elements, sufficient light has been obtained to illuminate a shop 60 feet by 40 feet; and upon the single circuit of a dynamo-electric machine absorbing 2½ horse-power, four lights of about 400 candle-power each have been obtained, with sufficient steadiness to read by with comfort.

CHAPTER III.

ELECTRIC "CANDLES" AND CANDLE-LAMPS.

JABLOCHKOFF'S CANDLE.

At the time when the construction of electric lamps was becoming more complicated in each successive instance, and practical men were under the impression that first cost in each lamp would effectually prevent more than special employment of the light, M. Jablochkoff, in March, 1876, brought out an electric "candle." As by this invention mechanism is entirely dispensed with, the impetus given to electric lighting was immense, and whatever objections may be raised against the system, there is no doubt that its introduction was the installation of electric lighting as a branch of engineering that has since and will steadily grow in importance.

A "candle" consists of two cylindrical carbon rods about three-sixteenths of an inch in diameter, each weighing about 8 grains per inch. These rods, varying from 6½ inches to 10 inches in length, are placed vertically side by side, with about three-sixteenths of an inch space between them, which is filled in with plaster of Paris. The combination constitutes a "candle." It is inserted in a holder shown in Fig. 24, and there held merely by a spring clip.

To complete the circuit and to start the lighting of the candle, there is laid horizontally, from top to top of the carbon rods, a small piece of graphite or lead from a drawing pencil. When once lighted, combustion is maintained by fusion of the plaster of Paris, and the candle, if once extinguished, cannot be relighted. This want of capability of relighting is a most serious objection to the system.

The fusion of the insulating material, the plaster of Paris, absorbs at least 30 per cent. of the electric current, which

FIG. 24.

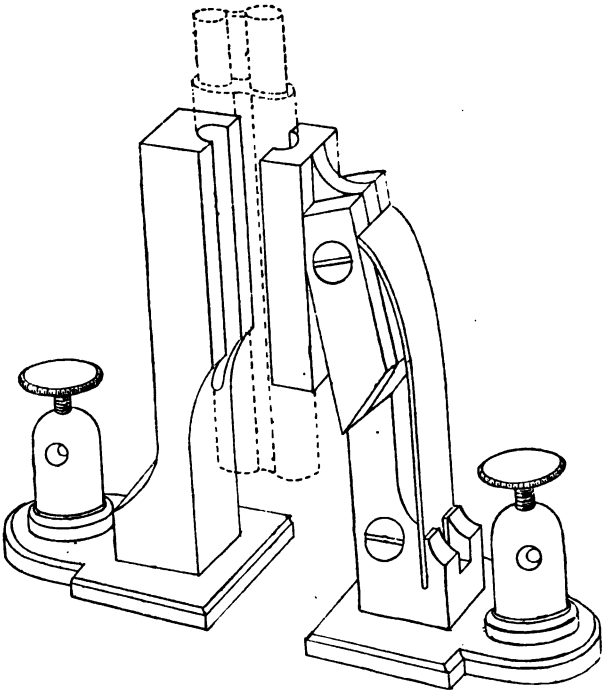

is thereby wasted. The relative consumption of carbon in this candle is shown by the following table, compiled from the Journal of the Franklin Institute.

Light in Candles.	Length consumed in inches per hour.		Approximate Weight per in. in grains.	Grains of Carbon per hour per Candle.
	+	−		
1230	1·78	0·34	36·2	0·062
900	1·91	0·58	36·2	0·100
440	2·45	0·73	20·3	0·146
705	3·15	0·55	20·3	0·106
760*	3·0	3·0	7·5	0·060

* Candle.

The first four lights were obtained with constant current machines, the size of the carbons in the first two being $\frac{3}{8} \times \frac{3}{8}$ of an inch, and in the third and fourth, one-fourth of an inch square.

The shorter Jablochkoff candles average only $1\frac{1}{2}$ hour in duration, and at the end of this time another candle has to be put in circuit. This is generally effected by hand, by a switch

FIG. 25.

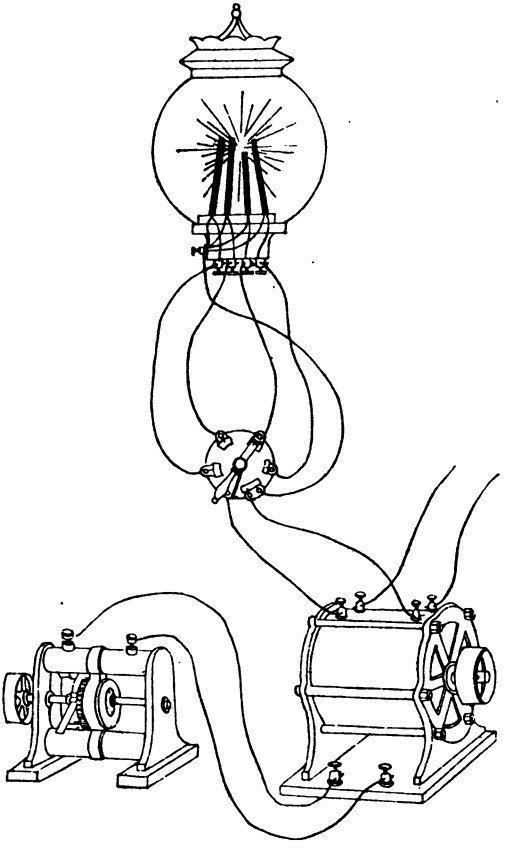

or commutator shown in Fig. 25, which represents the arrangement of the lamps and machines upon the Jablochkoff-Gramme system, usually employed with the Jablochkoff candle. The

single-direction current generated by a small Gramme machine is conveyed to magnetize the electro-magnets of a larger or "distributing" machine, whence currents of alternating direction are taken to the lamp. In each lamp are usually mounted four candles, affording light from six to nine hours.

To effect the ignition of a fresh candle, when required, an automatic arrangement has been devised, but has not been generally applied. It consists (Fig. 26) of a pivoted bent

FIG. 26.

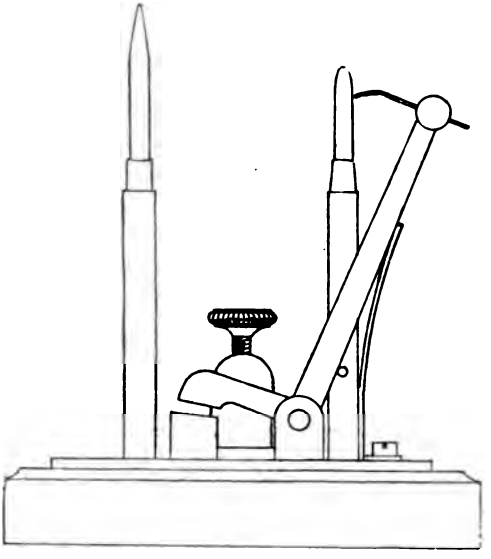

lever, pressed by a spring against the side of the candle. This lever at its other end makes contact with the connection of a second candle, when released by the consumption of the first.

DE MERITENS' CANDLE.

The objection to the Jablochkoff candle on the score of difficulty in relighting, and loss of current consumed in the fusion of the insulating material, has led to several attempts in remedy. One of these, by M. de Meritens, consists in placing between the two carbon rods, but not in contact with them, a third rod, of about half the diameter, instead of the

insulating substance. The electric arc plays from the outer carbons to the intermediate rod, which is consumed. The arc, thus divided, has less probability of total extinction, and requires lower expenditure of power to produce, as it has not so great distance to leap.

RAPIEFF'S CANDLE-LAMP.

FIG. 27.

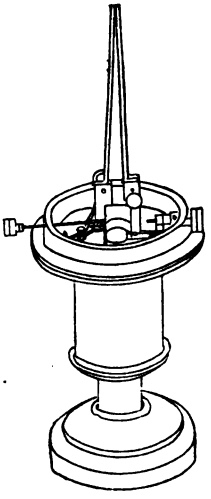

This invention (Fig. 27) is a return to mechanical aid. There is no insulating material inserted between the carbon rods, and their distance apart can be regulated by a screw adjustment. The holder of one of the carbons is connected to the armature of an electro-magnet concealed in the stand. When no current is passing, the upper ends of the rods are brought into contact by a spring attached to the armature of the movable carbon. When a current passes, the armature is attracted, and the carbons separated to the distance necessary to produce the arc. Upon interruption of the current, the armature is released, and the circuit again completed.

WILDE'S CANDLE-LAMP.

Mr. Henry Wilde, in a paper read before the Manchester Literary and Philosophical Society, after describing the Jablochkoff candle, says:—"My connection with the history of this system of lighting placed me in a position to make some experiments with the Jablochkoff candle, and led to the discovery of the following facts:—One of the conditions necessary for producing a constant light from the candle, in its most recent form, was that the quantity and intensity of the alternating current should be such that the carbons consume at a rate of from four to five inches per hour. If the electric current were too powerful, the carbons became unduly heated,

and presented additional resistance to the passage of the current; the points at the same time lost their regular conical form. If, on the other hand, the current were too weak, the electric arc played about the points of the carbons in an irregular manner, and the light was easily extinguished by currents of air.

"In the course of these experiments I was struck with the apparently insignificant part which the insulating material played in the maintenance of the light between the carbon points; and it occurred to me to try the effect of covering each of the carbons with a thin coating of hydrate of lime, and mounting them parallel to each other in separate holders, and without any insulating material between them. The use of the lime covering was intended to prevent the light from travelling down the contiguous sides of the carbons. On completing the electric circuit, the light was maintained between the two points, and the carbons were consumed in the same regular manner as when the insulating material had been placed between them.

"Two plain cylindrical rods of carbon, three-sixteenths of an inch in diameter and eight inches long, were now fixed in the holders parallel to each other, and one-eighth of an inch apart. The strength of the alternating current was such that it would fuse an iron wire 0·025 of an inch in diameter and eight feet in length. On establishing the electric current through the points of the carbons, by means of a conducting paste composed of carbon and gum, the light was produced, and the carbons burnt steadily downwards as before.

"Four pairs of naked carbons mounted in this manner were next placed in series in the circuit of a four-light machine, and the light was produced from these carbons simultaneously, as when the insulating material was used between them. The light from the naked carbons was also more regular than that from the insulated ones, as the plaster of Paris insulation did not always consume at the same rate as the carbons, and thereby obstructed the passage of the current. This was evident from the rosy tinge of the light produced by the volatilization of the calcium simultaneously with the diminution

of the brilliancy of the light from the carbons. The only function, therefore, which the insulating material performs in the electric candle, as shown by these experiments, is that it conceals the singular and beautiful property of the alternating current to which I have directed attention.

"As I have already said, the strength of the alternating current must bear a proper proportion to the diameter of the carbons used; and when a number of such lights are required to be produced in the same circuit, the quantity and property of the current will remain constant, while the tension will require to be increased with the number of lights.

"This simple method of burning the carbons will, I believe, greatly further the development of the electric light, as the carbons can be used of much smaller diameter than has hitherto been possible. They may also be of any desired length, for as they are consumed they may be pushed up through the holders without interrupting the light. One of these developments will be a better method of lighting coal and other mines. In this application the alternating currents or waves from a powerful electro-magnetic induction machine may be used for generating, simultaneously, alternating secondary currents or waves in a number of small induction coils, placed in various parts of the mine. The light may be produced in the secondary circuits from pairs of small carbons inclosed in a glass vessel having a small aperture to permit the expansion of the heated air within. Diaphragms of wire gauze may be placed over the aperture to prevent the access of explosive gas. By generating secondary currents or waves without interrupting the continuity of the primary circuit, the contact-breaker is dispensed with, and the subdivision of the light may be carried to a very great extent."

To initiate the light in the Jablochkoff system, it is necessary to complete the electric circuit between the carbons by means of some conducting substance, which volatilizes on the passage of the current, and establishes the electric arc between the points. When a number of such lights are produced simultaneously from the same source of electricity, any interruption in the continuity of the current extinguishes all the

lights in the same circuit, and each pair of carbons requires to be reprimed before the lights can again be established. This defect, as will be obvious, would cause great inconvenience when the lights are not easily accessible, or are at considerable distances apart. In the course of Mr. Wilde's experiments, it was observed that when the electric circuit was completed at the bottom of a pair of carbons close to the holders, the arc immediately ascended to the points, where it remained so long as the current was transmitted. This peculiar action of the arc was first thought to be due to the ascending current of hot air by which it was surrounded. This, however, was found not to be the cause, as the arc travelled towards the points, in whatever position the carbons were placed, whether horizontally or vertically in an inverted position. Moreover, when a pair of carbons were held in the middle by the holders, the arc travelled upwards or downwards towards the points according as the circuit was established above or below the holders. The action was, in fact, recognized to be the same as that which determines the propagation of an electric current through two rectilinear and parallel conductors submerged in contact with the terrestrial bed, which was described in the *Philosophical Magazine* for August, 1868.

In all the arrangements in general use for regulating the electric light, the carbon pencils are placed in the same straight line, and end to end. When the light is required, the ends are brought into momentary contact, and are then separated a short distance to enable the arc to form between them. The peculiar behaviour of the electric arc when the carbons are placed parallel to each other, suggested the means of lighting the carbons automatically, notwithstanding the fact that they could only be made to approach each other by a motion laterally, and to come into contact at their adjacent sides. To accomplish this object, one of the carbon-holders is articulated or hinged to a small base-plate of cast iron, which is so constructed as to become an electro-magnet when coiled with a few turns of insulated wire. The carbon-holder is made in the form of a right-angled lever, to the short hori-

zontal limb of which is fixed an armature, placed over the poles of the electro-magnet. When the movable and fixed carbon-holders are brought into juxtaposition, and the carbons inserted in them, the upper parts of the two carbons are always in contact when no current is transmitted through them. The contact between the carbons is maintained by means of an antagonistic spring, inserted in a recess in one of the poles of the electro-magnet, and reacting on the under side of the armature. One extremity of the coil of the electro-magnet is in metallic connection with the base of the carbon-holder, while the other extremity of the coil is in connection with the terminal screw at the base of the instrument from which it is insulated. The coils of the electro-magnet are thus placed in the same circuit as the carbon pencils. When the alternating current from an electro-magnetic induction machine is transmitted through the carbons, the electro-magnet attracts the armature and separates the upper ends of the carbons, which brings them into their normal position, and the light is immediately produced. When the circuit is interrupted, the armature is released; the upper ends of the carbons come into contact, and the light is produced as before. When several pairs of carbons are placed in the same circuit, they are, by this arrangement, lighted simultaneously.

SIEMENS' CANDLE-LAMP.

This is precisely similar to the preceding in principle. A modification consists in employing a bar of iron drawn into an electro-magnet coil, instead of the ordinary electro-magnet and armature, to cause separation of the carbons.

CHAPTER IV.

LIGHTING BY INCANDESCENCE.

THE production of the electric light by the incandescence of a badly conducting substance has long been a favourite idea with inventors, and it apparently offers many practical advantages. The renewal of carbons, as an instance, is either dispensed with, or the frequency of renewal lessened. Burners on this principle can be made so perfectly automatic that they shall not require attention to initially ignite them, but become incandescent immediately the current is directed through them. Thus, a material saving in the cost of maintenance is effected. To the present, however, lighting by incandescence has been considered to absorb more power to produce an equal amount of light; and, although this is undoubtedly true, the relation of light produced to power expended has not been made the subject of direct practical trial, leaving the question open as to the relative economy between lighting by the voltaic arc and by this system.

It has been determined that, where light-centres of great brilliancy are desired, the voltaic arc must be employed, because incandescence cannot be made, under any expenditure of power, to realize the same intensity of light as is produced by the voltaic arc. Hence, comparison between the value of the two systems is limited to lights of moderate power; and it is probable that, if electricity is to become available for all powers of light required, the two limits will be—the voltaic arc for lights of great power, and the use of incandescent conductors for lights of low power; whilst between these two limits, and tending towards the lower, the two systems will be combined.

The system of lighting by incandescence depends upon the principle that a bad conductor becomes heated during the

passage of an electrical current, and when heated, emits light. When a body is at a temperature of

250	degrees,	it may	be called	warm,
500	„	„	„	hot.
At 1000	„	we have the heat rays,		
„ 1200	„	„	„	orange rays,
„ 1300	„	„	„	yellow rays,
„ 1500	„	„	„	blue rays,
„ 1700	„	„	„	indigo rays,
„ 2000	„	„	„	violet rays.

So that any body raised to a temperature above 2000° C. will give us all the rays of the sun. Given the resistance of a conductor, it is easy for an electrician to calculate the amount of current required to heat it to a certain temperature.

FIG. 28.

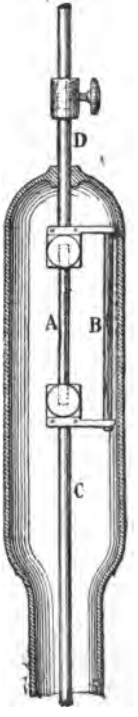

The conductors generally employed to afford light are slender carbon rods, platinum wire or strip, or iridio-platinum, which is an alloy of the metals iridium and platinum. Platinized asbestos has also been proposed.

KING'S BURNER.

King, in 1845, appears to have been the first to have considered this method of lighting. The following passages are taken from the specification of the patent:—

"The invention has for its basis the use of metallic conductors, or of continuous carbons, heated to whiteness by the passage of an electric current. The best metal for this purpose is platinum; the best carbon is retort carbon. When carbon is employed, it is useful, on account of its affinity for oxygen at high temperatures, to cover it from air and moisture, as in Fig. 28. The conductor C rests on a bath of mercury; the bar B is in porcelain, it serves to support the conductor C; the conductor D is fixed on the bell by an hermetically sealed joint. The carbon rod A rests at top and bottom on conducting blocks, and becomes incan-

descent by the passage of an electric current. A vacuum is previously established in the bell, and the apparatus veritably forms a barometer with one of the poles of the battery in communication with the column of mercury, and the other with the conductor D. The apparatus, properly closed, may be applied to submarine lighting, as well as to the illumination of powder mills and of mines, especially where the danger of explosion is feared, or the rapid inflammation of very combustible substances. When the current is of sufficient intensity, two or a larger number of lights may be placed in the same circuit, care being taken to regulate the power of the magneto-electric machines, or the elements of the battery producing the current."

STAITE AND PETRIE'S BURNER.

In 1846 and 1849 Greener, Staite, and Petrie introduced similar ideas to King's, and Petrie inserts in his patent for a lamp the following suggestion:—"A light may be produced by passing an electric current through a short and thin conductor, which heats and becomes luminous; but the majority of substances fuse and burn rapidly: however, I obtain a good light by using iridium, or one of its alloys. Iridium may be fused so as to produce an ingot whilst it is submitted to the heat of the voltaic arc; afterwards it may be decarbonized and rendered more malleable. It can be cut into small pieces of 0·001 mètre diameter and 0·010 to 0·020 mètre length, that can be fixed upon two insulated metallic supports, which are in connection with the two wires of a proper galvanic battery. There is then obtained a beautiful light."

LODYGUINE'S BURNER.

Lighting by incandescence appears to have faded out of view until 1873, when M. Lodyguine reintroduced the system. He employs carbon in a single piece, diminishing the section at the most luminous point. Two carbons are placed in the same apparatus, and are brought into circuit by a small exterior commutator as consumed. Scarcely more credit can be afforded to this inventor than the resuscitation of the idea.

KONN'S BURNER.

This lamp (Fig. 29) consists of a base, A, in copper, on which are fixed two terminals, N, two bars, C D, in copper, and a small valve, K, opening only outwards. A glass case, B, is retained on the base by a collar, L, pressing on an india-rubber ring. One of the vertical rods, D, is insulated electrically from the base, and communicates with a terminal also insulated. The other rod, C, is constructed in two parts, consisting of a tube fixed directly upon the base without insulation, and of a copper rod split for a part of its length. This split gives elasticity, and admits of the rod sliding in the tube. Five retort carbons, E, are placed between two small plates. Each carbon is introduced into two small blocks, also of carbon, which receive the copper rods at their extremities. The rods are equal in length at their lower ends, and of unequal length at their upper ends. A hammer, I, is hinged on the bar C, and rests only on a single rod of carbon at once.

If this lamp is placed in circuit by attaching the two conductors from a battery to the terminals, the bar of carbon E is traversed by the current which passes, by the aid of the hammer I, from the copper bar F, the two carbon blocks O O, the copper bar G, and the plate above the bar D.

Vacuum is previously made by putting the cock K in connection with an air-pump. The rod E becomes luminous. Its section diminishes, the rod breaks, and the light disappears. The hammer I then falls on another rod, and nearly instantaneously lighting is re-established. When all the carbons are consumed, the hammer rests upon the copper rod H, and the current is not interrupted.

Each lamp gives a light of about 160 candle-power.

BOULIGUINE'S BURNER.

In this burner (Fig. 30), one of the bars is pierced with a small hole from top to bottom, and has a slot admitting the passage of two small lateral lugs. The carbon is introduced into this bar, and is assisted to rise by a counterweight connected by cords to lugs in the transverse support on which the carbon rests. The part of the carbon which is to become

Fig. 29.

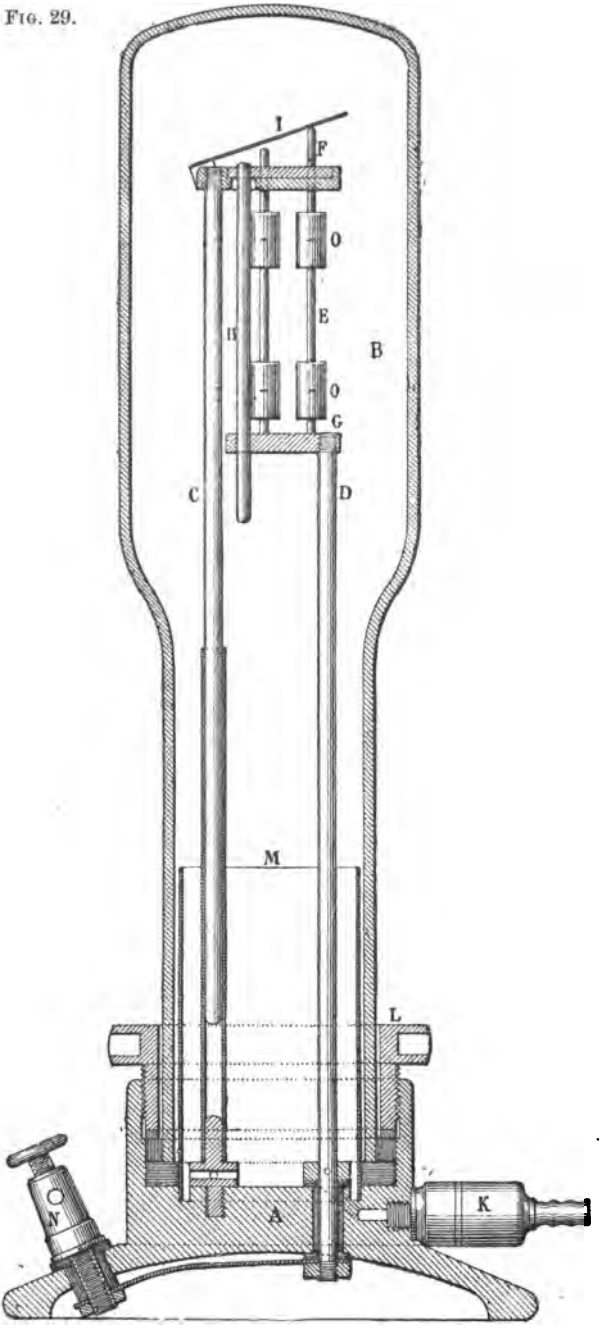

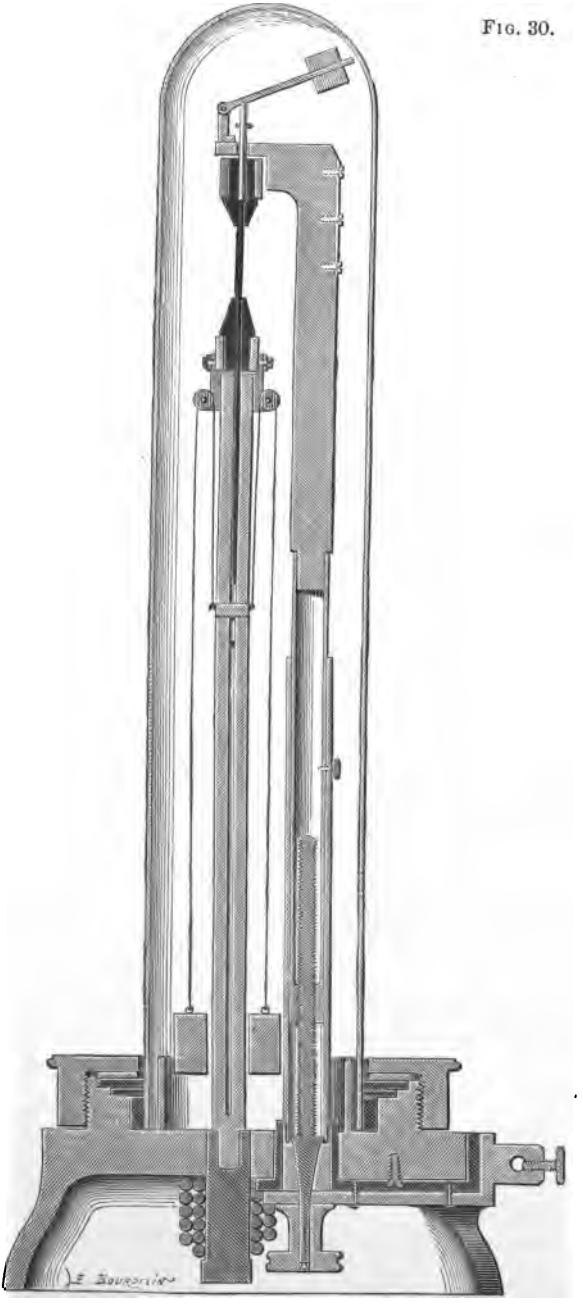

FIG. 30.

incandescent is held between the clips of two conical blocks of retort carbon. A screw, placed on the base, admits of increasing or diminishing the length of the bar which carries the upper conical block, and consequently of giving to the luminous part greater or less length.

When the lamp is placed in circuit, the carbon rod illuminates until about to break. Then an electro-magnet opens the clips of the carbon-holders, the counterweight above drives out the fragments that remain between the lips, and the carbon rod rises and penetrates the upper block, re-establishing the current. This lamp has not been successful in practice, probably due to the somewhat delicate adjustment required of the upper carbon clips.

FONTAINE'S BURNER.

This burner, shown in Fig. 31, consists of an arrangement by which the carbons are set in a groove at each of their extremities in rigid contact, and kept fixed, admitting of the burner being placed in any position. The electric current passes automatically from one carbon to the other, under the action of the electro-magnet, which is included in the circuit.

The only reliable elucidation of this system of lighting is also due to M. Fontaine, and the description of the following experiments is taken from his work, the result representing the mean of more than twenty trials :—

State of the Circuit.	Methods of Coupling the Battery.							
	2 Series parallel of 24 Elements.		3 Series parallel of 16 Elements.		4 Series parallel of 12 Elements.		1 Single Series of 48 Elements in Tension.	
	Galvanometer deflection.	Luminous Intensity of each Lamp.	Galvanometer deflection.	Luminous Intensity of each Lamp.	Galvanometer deflection.	Luminous Intensity of each Lamp.	Galvanometer deflection.	Luminous Intensity of each Lamp.
Circuit closed on itself	47	...	70	...	70	...	50	...
5 lamps	28	Reddish-white	17	Cherry-red	10 or 11	Dull-red	35	¼ burner
4 lamps	29	¼ burner	22	Reddish-white	16	Orange-red	38	2¼ burners
3 lamps	38	1 to 2 burners	28	½ burner	26	¼ burner	41	3¼ burners
2 lamps	40	3 burners	41–42	2¼ to 3 burners	40–45	3 to 5 burners	44	5 burners
1 lamp	43	4 to 5 burners	49	11 to 12 burners	60	40 burners	45–46	6¼ to 7 burners

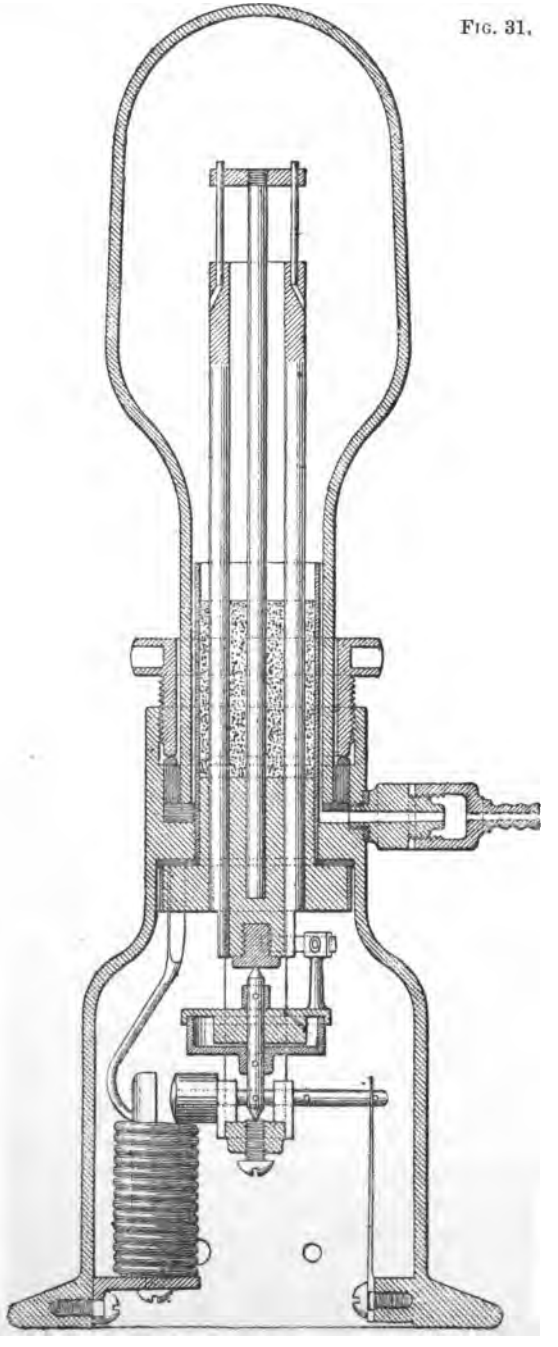

FIG. 31.

"The lamps were grouped like the elements of a battery in tension, then forming a single series.

"In the following table are given the results obtained with lamps arranged in *batteries*, that is to say, on distinct circuits derived from the battery. Because of the considerable differences observed in the intensities of the light of each lamp during the same experiment, we give the total light instead of that produced by each lamp:—

State of the Circuit.	Methods of Coupling the Battery.							
	2 Series parallel of 24 Elements.		3 Series parallel of 16 Elements.		4 Series parallel of 12 Elements.		8 Series parallel of 6 Elements.	
	Galvanometer deflection.	Total Light emitted by the whole of the Lamps.	Galvanometer deflection.	Total Light emitted by the whole of the Lamps.	Galvanometer deflection.	Total Light emitted by the whole of the Lamps.	Galvanometer deflection.	Total Light emitted by the whole of the Lamps.
Circuit closed on itself	58½	...	68	...	69	...	70	...
5 lamps	57	...	64½	¼ burner	63½	2½ burners	60	...
4 lamps	56½	...	63	¼ burner	63	3 burners	59	...
3 lamps	56	1 burner	61½	2 burners	62	4 burners	58	¼ burner
2 lamps	55	5 burners	60	6½ burners	59	15½ burners	55	1½ burner
1 lamp	52½	9 burners	57½	54 burners	55	65 burners	46	8 burners

"We have recently made similar trials with Gaudoin artificial carbons of the same section, and the results have been more satisfactory. Thus the total light produced with 48 elements in four series and a single lamp reached 80 burners, and that produced with the same battery and three lamps attained 30 burners.

"The same battery coupled in tension and actuating a Serrin lamp gives a voltaic arc of 105 burners; but the light obtained by incandescence is much steadier and more agreeable to the eye.

"From what precedes, it appears to result that King and Lodyguine's system is much more favourable to large foci than to the divisibility of the electric light; however, it is proper to remark that when 10 burners per lamp are not exceeded, the carbons have a very long duration, whilst they are consumed very quickly for an intensity of 60 to 80 burners.

"Only carbons of 0·0016 mètre diameter and 0·018 mètre

luminous length were until then those tried; these behave very well with a strong current, but give no light with 12 elements. It became interesting to learn what light could be obtained with 12 elements by diminishing the length of the carbons. This was the object of a new series of experiments. "Five different combinations were attempted, by varying in turn the coupling of the battery the diameter of the carbon, and its length.

FIG. 32.

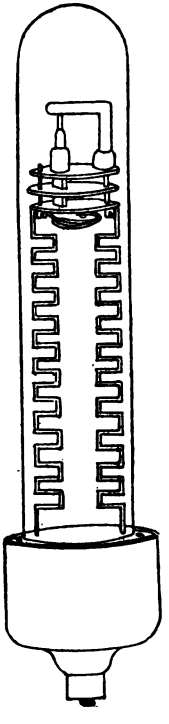

FIG. 33.

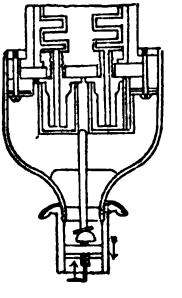

"The best results were obtained with a single lamp furnished with Gaudoin carbons of 0·0016 mètre diameter, and of 0·015 mètre length, in the incandescent portion.

"The light varied between two and eight burners, but it was more often five burners. Each carbon lasted on average 15 minutes."

THE SAWYER-MAN BURNER.

This burner, the invention of Messrs. Sawyer and Man, is shown in Fig. 32. The light is produced by the incandescence of the slender pencil of carbon. The light-giving apparatus is separated from the lower part of the lamp by three diaphragms, to shut off downward heat radiation. The copper standards are so shaped as to have great radiating surface, so that the conduction of heat downward to the mechanism of the base is wholly prevented. The structure of the base enlarged is shown in Fig. 33. The electric current enters from below, follows the metallic conductors to the "burner" as shown by the arrows, thence connecting with the return circuit. The light-producing portion is completely insulated, and sealed at the base, gas-tight.

This light has attracted considerable attention in America, and its method of working is thus described by the company formed for its supply:—

"It is well known that an electric current will exactly and readily divide among circuits of equal resistance. Accordingly, if the resistance of a sub-circuit be maintained constant, no matter what may be going on in it, whether a lamp is not lighted at all, or lighted to a mere taper, or to any intermediate stage up to full brilliancy, it is obvious that no other lamp or lamps in that circuit will be affected.

"The lamp has, let us say, a resistance of 0·95 of an ohm. Therefore, if one lamp is out, there should be a resistance of 0·95 of an ohm in its stead. This is the shunt resistance. The resistance of the circuit is maintained constant at 0·95, no matter what may be the change in the proportion of the current given the lamp. The varying resistances required to give the best effect have been worked out by practical trial.

"Thus it is seen that the greater part of the illumination is the product of a small part of the current. When the light is well on, a very slight increase in the current increases the light enormously. It is here that the great loss occasioned by dividing a fixed current among several lamps finds its explanation. A current that suffices in one lamp to produce a light, say, of 100 candles will, if divided between two lamps, give in each perhaps no more than ten candles, or even five, making a loss of 90 candles in the sum total. But if the current be doubled, each lamp will give a light of 100 candles, and the sum total will be 200 candles instead of ten. Having brought a candle or a system of candles up to the point of feeble incandescence, a (proportionally) small addition to the current will make them all brilliant. If at 6000° F. a given carbon will produce a light of three candles, at 12,000° it will give nine candles, and at 24,000° it will give 81 candles; the illuminating power increasing with vastly greater rapidity than the temperature.

"The wires supplying the current may be run through existing gas-pipes, each lamp being provided with a switch placed conveniently in the wall; and by simply turning a key

the light is turned up or down, off or on. So long as the house is connected with the main, it makes no difference to the producer whether all the lights are on or off, since the resistance of the entire (house) circuit must be overcome; though it will to the consumer, since a meter records the time that each lamp is on, and the charge is rated accordingly. The cost of lamps and switches, it is claimed, will not exceed that of gas fixtures.

"The meter is a simple clock arrangement, with an attachment designed to throw the dial hands into connection when a light is on. From each switch a pair of conducting wires are run to opposite studs on a wooden disc. When no current passes through the lamp, the revolving spring turns without making any record. When the current is on, one electric connection at each revolution is made through the pins assigned to the particular lamp, the armature of the magnet is moved, and the recording wheel is advanced one notch. This meter does not measure the quantity of electricity passing, but only the time a lamp is on. If two or any larger number of lamps are on, an equal number of connections are made at each revolution of the wheel, and the record wheel is advanced to correspond. This registration is, of course, a mere matter of business detail. In view of the well-founded popular dislike to gas meters, however, it would seem to be desirable to dispense with such devices entirely; and the nature of electric distribution appears to favour other and less objectionable modes and means of determining the financial relations of producers and consumers.

"Where the main is tapped for a sub-circuit, a shunt is introduced so as to throw so much of the current as may be needed into the derived circuit. The resistance of, say, 100 added lamps will be about 100 ohms. By giving to the shunt a resistance of one ohm, 1-100th of the current will be diverted, and the lamps supplied. When a large number of lamps are required in a circuit, a combination of the two plans indicated is employed.

"The diversion of any portion of the electric supply into an added circuit, whether one house or a group of houses,

necessarily increases the aggregate resistance of the electric district, and calls for more work from the generator. To meet such contingencies automatically, a regulator has been invented, which responds instantly to any increase or diminution in the demand, thereby securing an absolutely uniform volume of current.

"This regulator so controls the steam or other power actuating the generator of electricity, that the amount of power supplied is increased or diminished in exact proportion to the demand, either by changing the volume of steam produced, or by coupling on or detaching different generators or parts of a single generator in circuit.

"With regard to the cost of this mode of electric lighting no positive figures can be given. It is claimed to be entirely demonstrated that one horse-power will give by the Sawyer-Man system of incandescence a light of 35 foot gas-burners an hour. Where large powers are employed, the cost of steam-power, every item included, is commonly rated at one cent per horse-power per hour. The cost of 150 feet of gas, at New York rates, is 41 cents, which would make the gas over forty-fold dearer than the Sawyer-Man light."

JABLOCHKOFF'S BURNER.

M. Jablochkoff, recognizing the advantage of regularity offered by the system of incandescence, designed a burner (Fig. 34) which consists of a strip of kaolin mounted between two springs forming the ends of the conducting wires. A film of some conducting substance is painted along the edge of the strip, to enable the electric circuit to be formed when lighting is begun. This arrangement gives a very soft, pleasing light, but needs machines producing currents of high electro-motive force, and therefore expensive in construction and maintenance. Its use has given way to the more practicable "candle" introduced by the same inventor.

FIG. 34.

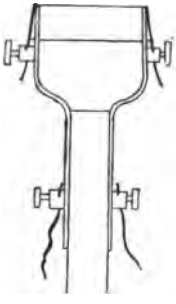

EDISON'S BURNER.

Instead of carbon rods, Mr. Edison employs an alloy of iridio-platinum. This alloy is, however, liable to fusion, under the action of an electric current-strength at which carbon is available for illumination. To prevent fusion of the wire, it is necessary to put it out of circuit when approaching the fusing point. In effecting this, use is made of the expansion of the wire produced by heat; as the wire expands, so is a bar drawn nearer to a contact-stop by a spring. At a certain limit of expansion, which can be adjusted, the wire is put out of circuit by a "short circuit" being completed. The principle is illustrated by Fig. 35. One end of a strip of iridio-platinum is rigidly fixed to the top of a cross-bar, with which a wire is connected. The other end is affixed to the lower end of the cross-bar, which is connected with a lever actuated by a spring. The other wire is also joined to this point. Underneath this lever is an adjustable screw tipped with platinum. From the standard of this screw runs a shunt wire to the top of the strip of the alloy. As the strip is heated it expands, and the spring on the lever draws it down. The shunt screw is set to the desired degree of heat, and when this is reached the lever is in contact with the screw, and the current is shunted out of the strip. In practice, this contact is being constantly made and broken.

FIG. 35.

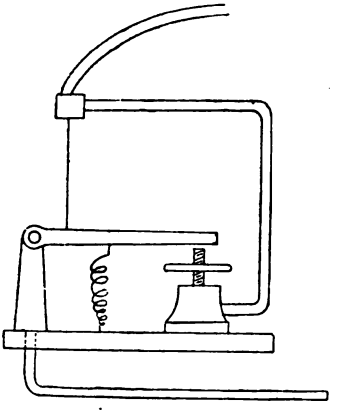

In practice, Mr. Edison employs the form of lamp shown in Figs. 36 and 37, and thus described by him: "Platinum and other materials that can only be fused at a very high temperature have been employed in electric lights; but there is risk of such light-giving substance melting under the electric energy. This portion of my invention relates to the regulation of the electric current, so as to prevent the same becoming

so intense as to injure the incandescent material. The current

Fig. 36.

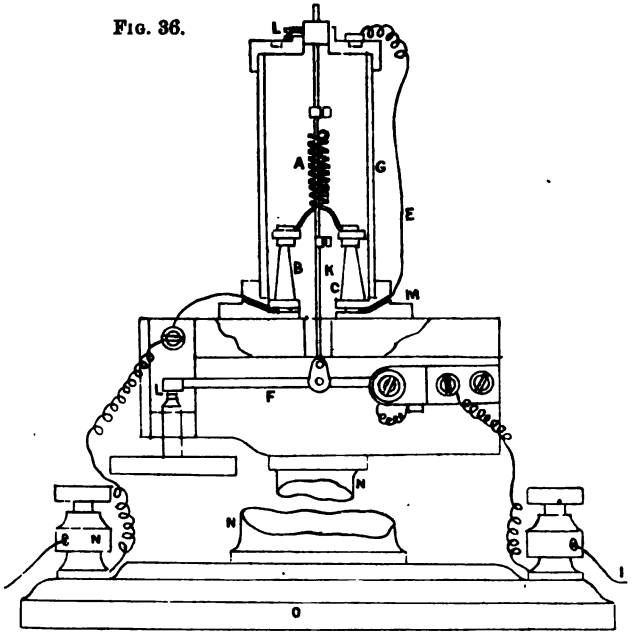

regulation is primarily effected by the heat itself, and is automatic. In Fig. 36 I have shown the light-producing body as a spiral, A, connected to the posts B C, and within the glass cylinder G. This cylinder has a cap, L, and stands upon a base, M, and for convenience a column, N, and stand, O, of any suitable character, may be employed. I remark that it is preferable to have the light within a case or globe, various materials may be employed, and that such as alum water, between concentric cylinders to lessen radiation, retain the heat, and lessen the electric energy required; or coloured or opalescent glass, or

Fig. 37.

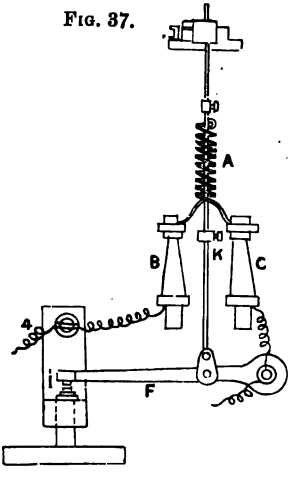

solutions that reduce the refrangibility of the light, such as sulphate of quinine, may be employed to moderate the light, and the light may either be in the atmosphere or in a vacuum. The materials that I have found especially adapted to use as light-giving substances are set forth hereafter. The electric circuit (Fig. 36) passes by line to the post, and by a wire to the lever F, thence by the wire or rod K, cap L, wire E, to the post C, through the double spiral A to the post B, and by a metallic connection or wire to the post N and line, and so on through the electric circuit, and the light be developed in A. The rod K will expand in proportion to the heat of the coil, or in proportion to the heat developed by the passage of the current through the fine wire, and, if the heat becomes dangerously high, injury to the apparatus is prevented by the expansion of rod K moving the lever F, to close the circuit at L and short-circuit or shunt a portion of the current from the coil A, and reducing its temperature; this operation is automatic, and forms the principal feature of my invention, because it effectually preserves the apparatus from injury. The current need not pass through the wire or rod K, as the expansion thereof by the radiated heat from the coil A will operate the lever F, as indicated in Fig. 37, but the movement is not so prompt. It is to be understood that in all cases the action of the short circuit or shunt is momentarily to lessen the current through the light-giving substance, and the circuit-closing devices play up and down at the contact point, maintaining uniformity of brilliancy of light."

As an accessory method, it is suggested that, "in lighting by electricity, it is often important to use a secondary battery in connection with the main current. Electric-light coils may be put in a secondary circuit containing cells, with plates in a conducting liquid, and a lever is vibrated by an electro-magnet or by clockwork. When the lever is in contact, the current from line passes through the electro-magnet and cells; but when the contact ceases, the line is closed, but a local circuit is made through the coils and secondary battery; the discharge of the secondary battery gives the light, and the movement is so rapid that the light appears continuous. A single

secondary battery may be introduced with one or more lights, the expansion of the light-giving material short-circuiting the current through the secondary battery. Instead of a rheostat in the shunt circuit, I sometimes employ a button of carbon. In this case the spring lever, bearing upon the carbon button, lessens the resistance by the increase of pressure as the platina strip expands; and as it contracts and lessens the pressure on the carbon button, the resistance of that carbon button increases, and a greater portion of the current is sent through the platina strip. This regulation is very accurate."

Whether the use of carbon or the use of platinum is the more economical has yet to be determined. Professor Ayrton has shown that light should be maintained in a carbon rod by a minimum electro-motive force of about half a Daniell cell, whilst one-third cell is only required for platinum. But the same quality of caloric raises the temperature of a small bar of carbon to a degree nearly twice that attained by a platinum wire of the same dimensions. The resistance of the carbon is nearly 250 times greater than that of the metal, so that a carbon rod may be 15 times thicker than a platinum rod to give the same result. Further, the carbon is practically infusible, but unfortunately oxidizes or consumes by combination with the oxygen of the air.

CHAPTER V.

MAGNETO- AND DYNAMO-ELECTRIC MACHINES.

A MAGNETO-ELECTRIC machine may be defined as a mechanism intended to create, by the help of magnetism, induced electric currents, or in other words, to transform work into electricity. The term "magneto-electric" is usually confined to those machines in which the magnetism is obtained from permanent magnets. When permanent magnets are replaced by electro-magnets, the term "dynamo-electric" is generally used. The term "dynamo-electric" is, of course, applicable to any form of machine, such as a frictional electric machine, by which work is converted into electricity; but custom has limited its use.

The same principle underlies the action of all magneto- and dynamo-electric machines—that the cutting of a line or field of magnetic force by a closed wire circuit induces in the wire an electric current. The direction of this current will vary with the direction of motion and the polarity of the magnetic field.

The year 1820 was an epoch of most eventful discovery as concerns electrical science. In July, Oerstedt found that a closed electric circuit deflected a magnetized needle. Two months afterwards, De la Rive repeated the experiment before the Academy of Sciences at Paris. Some days later, Ampère demonstrated the mutual action of two currents and of magnets on currents, and Arago discovered that an electric current imparts magnetic properties to iron and steel.

Ten years elapsed before Faraday discovered that a magnet could bring into existence an electric current, and he illus-

trated his discovery, as he did all his discoveries, by a simple and beautiful experiment. If a bar-magnet (Fig. 38) is intro-

FIG. 38.

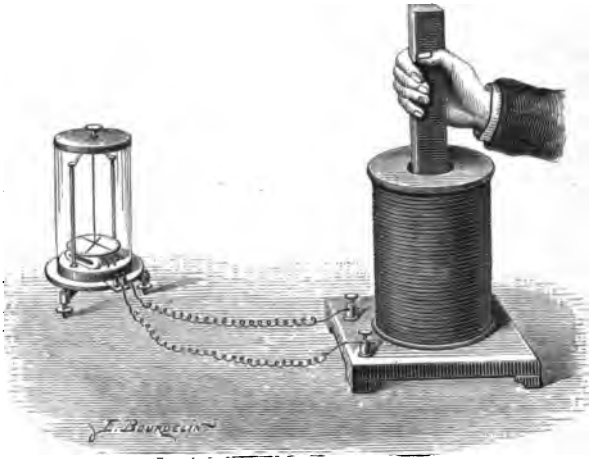

duced into a bobbin or coil of insulated wire, an electric current appears in the wire if the circuit is closed. When the bar enters the coil, the galvanometer needle indicates the existence of a current of a certain direction; when the movement is arrested, the needle returns to zero; when the bar is withdrawn, the galvanometer indicates a current inverse in direction to the first. These currents are termed *induction* currents, or *induced* currents, and the magnetic bar, the *inductor*.

When an electric circuit is traversed by an electric current of a certain direction, and there is approached to it another circuit not traversed by a current, there is induced, during the period of approximation, an electric current in this second circuit, in inverse direction to the first. The fact is illustrated experimentally by Fig. 39. When the coil connected to the battery is plunged into that connected to the galvanometer, there is produced in the latter a current of opposite direction to that in the former coil. But when the inducing bobbin is withdrawn, there arises in the second coil a current of opposite

direction to that caused in the same coil by the introduction of the inducing coil.

FIG. 39.

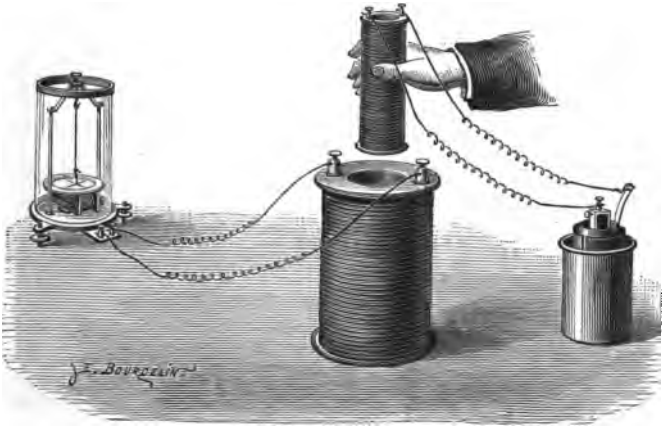

The method of utilization of these facts will be apparent upon study of the various machines in which they are employed.

PIXII'S MACHINE.

Pixii's machine, invented in 1832 (Fig. 40), consists of an electro-magnet attached to the upper part of a framework, and a magnet arranged to turn rapidly before the electro-magnet, pole to pole. A handle and a pair of bevel wheels suffice to rotate the magnet. The arrangement of the apparatus is, of course, primitive.

THE COMMUTATOR.

When movement is imparted to the magnet, its poles are made to pass successively before the poles of the electro-magnet. There is induced in the wire of the coils at each half-revolution a current which passes into the conducting wires parallel to the vertical standards. This current is alternately direct and inverse, and for many applications must be caused to take one direction. This is effected by means of a commutator on the axis of rotation, upon which press springs in connection with the conducting wires.

The commutator is one of the most important parts of these machines, and its principle is explained by the diagram (Fig. 41).

FIG. 40.

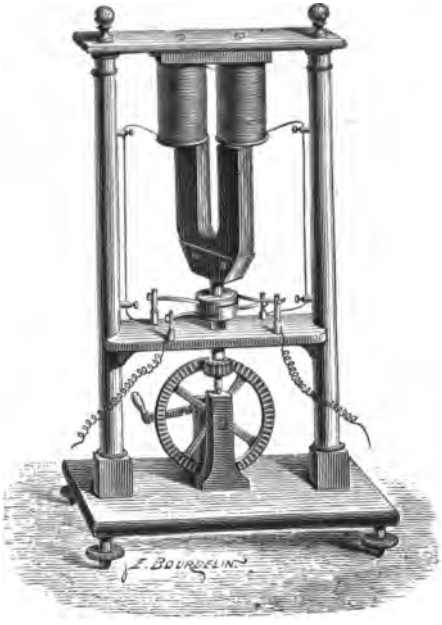

FIG. 41.

A and B are two halves of a cylinder, completely insulated one from another by a bad conductor F G. Let each be connected with one of the poles of a voltaic battery. So long as the cylinder remains at rest, the friction springs C and D and the conductor H J are affected by a direct current; but when the cylinder rotates, the current collected by the friction springs will change direction. If, however, the cylinder A B is put on the axle of a machine, so as to turn with it, and if the half-cylinder A is connected to one coil of the electro-magnet and the half-cylinder B to the other, there happens the exact contrary; the currents collected are always in the same direction, because the current in the electro-magnet changes its direction at the same instant that the friction springs C D change on the half-cylinders.

Such is the principle of all commutators, to present the inverse poles of a circuit to the friction-pieces at each inversion of the current in the machine.

Where the friction-pieces leave one of the conductors of the commutator to pass the other, sparks generally appear, which are very intense, and rapidly consume this portion of the apparatus.

CLARKE'S MACHINE.

Clarke's machine (Fig. 42) consists of a bundle of horse-shoe magnets. Before this bundle two bobbins are revolved, by means of a bevel wheel and small crown wheel mounted

FIG. 42.

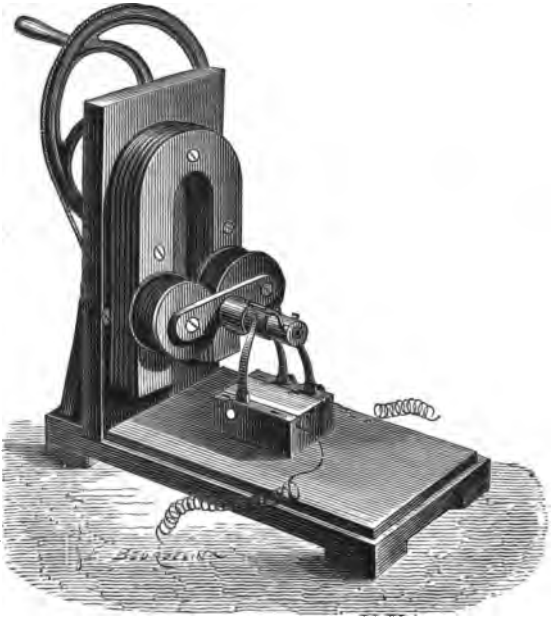

on the axle of the coils. The coils are wound on two cylinders of soft iron, connected together by the same metal. A commutator at the extremity of the axis redirects the currents. This machine is usually considered the parent of existing electric machines, and is noticeable from the good arrangement of the parts.

BREGUET'S MACHINE.

This magneto-electric machine (Fig. 43) bears a close resemblance to Clarke's. But in Clarke's machine, however rapidly the currents were made, they were not absolutely

FIG. 43.

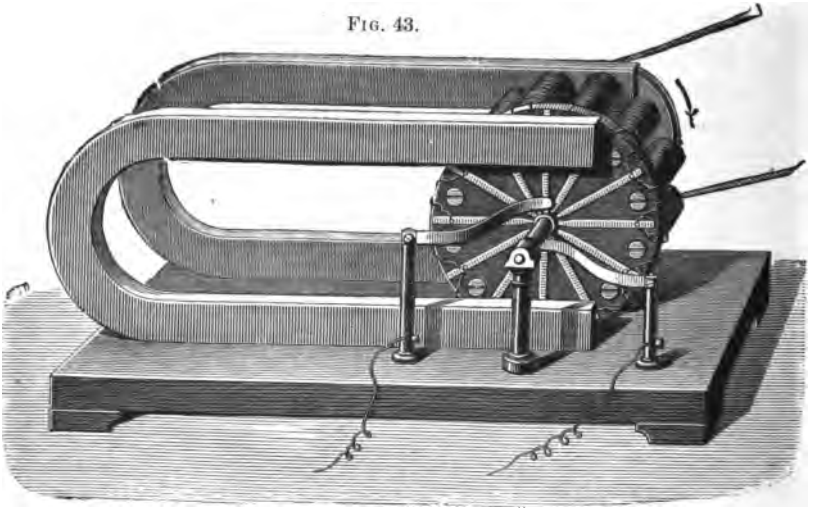

continuous. M. Alfred Niaudet Breguet modifies the rotating bobbins so as to obtain a perfectly continuous electrical current. A circular disc is mounted on a horizontal axis. Twelve bobbins are inserted in this disc. The bobbins are connected together as so many elements of a galvanic battery, and form one continuous length. The electrical condition of each bobbin when in movement may be inferred from Lenz' law, that an *inverse* current is induced when a conductor approaches a pole of a magnet, and a *direct* current when it is withdrawn from the pole. Suppose the whole armature to revolve in the direction indicated by the arrow. All the bobbins on the left will be traversed by a current in one direction, and all those on the right by a current opposite in direction, but equal in volume to the former. The apparatus might not inaptly be compared to two distinct batteries, consisting of six elements, each connected together for tension;

all that remains to complete the analogy is to unite these two batteries for quantity. This is effected by two metallic springs, attached to two small uprights which are the terminals of the magneto-machine. Twelve strips of copper are disposed radially, and to them are attached the two adjacent ends of each pair of bobbins. The metallic springs are virtually current collectors; and as they are always in contact with several of the radial strips, they must always be traversed by electric currents. Hence the perfect continuity of the current developed by this machine.

This apparatus is serviceable in cases requiring high tension but small quantity. In this respect, and the facility afforded of constructing cylindrical bobbins with very fine wire, it may possess some advantage over the Gramme machine.

BRUSH'S MACHINE.

The leap from magneto- to dynamo-electric machines may be considered too sudden, but a comparison of the machine about to be described—one of the most successful and practical of electric-light machines—with the earlier forms, will prove more easily the immense powers derived from the application of the principle known as that of *mutual accumulation.* This principle, first patented by Mr. Varley, and subsequently discovered, it is said simultaneously, by Sir Charles Wheatstone and by Dr. Werner Siemens, consists in passing through the coils of the electro-magnet (substituted for the permanent magnets) the current generated by the revolving coils, this current being developed *ab initio* by the magnetism never completely absent from the iron core of an electro-magnet. The increase of magnetism caused by the increase of current in the coils of the electro-magnet increases the current induced in the revolving coils, and there thus occurs a development of current at compound interest, and this means of development is an application of the principle of mutual accumulation. Mr. Brush, the inventor of the machine bearing his name, considers that even the best forms of magneto-electric apparatus are unnecessarily bulky, heavy,

and expensive, and are more or less wasteful of mechanical power.

The armature of the Brush machine (Figs. 44 to 46) is of iron, in the form of a ring, and is attached to a hub. This hub is rigidly attached to the shaft C, which, when driven by the pulley, causes the armature to revolve in its own plane.

FIG. 44.

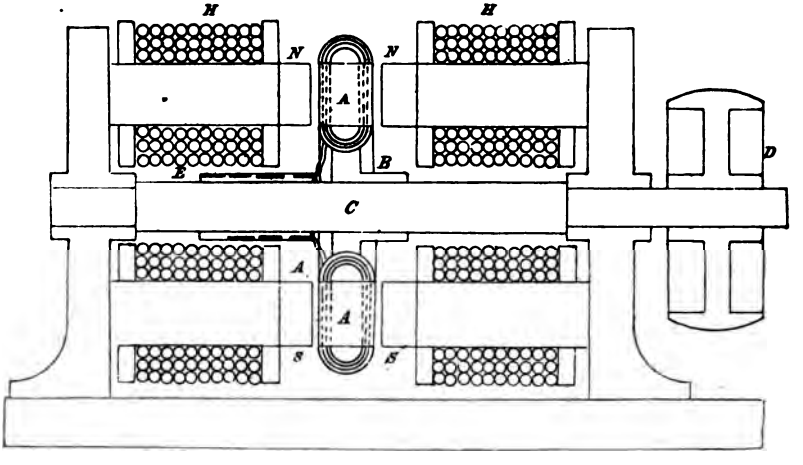

The armature, instead of having a uniform cross section throughout its circumferential length, as is customary with annular armatures, is provided with grooves or depressions in a direction at right angles with its magnetic axis or length. These grooves are wound full of insulated copper wire. The sections of wire thus formed are of any suitable number. The advantage of winding the wire on the armature depressions is twofold: (1) The projecting portion of the armature between the sections of wire may be made to revolve very close to the poles N N and S S of the magnets, from which the magnetic force is derived, thus utilizing the inductive force of the latter to a much greater extent than is possible in the case of annular armatures entirely covered with wire, which therefore cannot be brought very near the magnets. (2) Owing to the exposure of a very considerable portion of the armature to the atmosphere, the heat, which

is always developed by the rapidly succeeding magnetizations and demagnetizations of armatures in motion, is rapidly dissipated by radiation and convection.

In the case of armatures entirely covered with wire, the escape of heat is very slow, so that they must be run at a comparatively low rate of speed, with corresponding effect, in order to prevent injurious heating.

Diametrically opposite sections on the armature may have their first or their last ends joined together, and their remaining ends connected with two segments of metal of the commutator cylinder, which is carried by the shaft, and is of insulating material (Fig. 45).

Fig. 45.

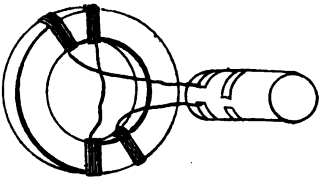

The two metal segments are placed diametrically opposite each other on the cylinder, and are each of a length less than half the circumference of the latter, thus exposing the insulating cylinder in two places diametrically opposite each other, and alternating with the metal segments. The two segments, say, S^3 and S^7, corresponding to sections 3 and 7 of wire, hold a position on the cylinder in advance of those of the preceding sections S^2 and S^6 to the same angular extent that the sections 3 and 7 in question are in advance of sections 2 and 6. In this arrangement the number of segments is equal to the number of sections, each segment being connected with but one section. The first and last ends of each section can, however, be attached to two diametrically opposite segments, the commutator cylinder in that case being constructed with double the number of segments as in the former case, thus making the number of segments double the number of sections. Two metallic plates or brushes, insulated from each other, press lightly upon the cylinder, at opposite points, so selected that while each section of wire on the armature is passing from one neutral point to the other, the corresponding segments on the cylinder will be in contact with them. These plates or brushes collect the

currents of electricity generated by the revolution of the armature, one being positive and the other negative. When the section of wire is passing the neutral points on the armature, the plates are in contact with the insulating material of the cylinder between the corresponding segments, thus cutting the section, which is at the time useless, out of the circuit altogether. The necessity of thus insulating each section from the plates during the time it is inactive becomes obvious when it is considered that, if this were not done, the idle section would afford a passage for the current generated in the active sections. During the time a section or bobbin is passing from one neutral point of the armature to the next one, an electric impulse, constant in direction, but varying in electro-motive force, is induced in it. This electro-motive force, starting from nothing at the neutral point, quickly increases to nearly its maximum, and remains almost constant until the section is near the next neutral point, when it rapidly falls to zero as the neutral point is reached.

The insulating spaces are made of such a length that a section or bobbin is cut out of the circuit, not only when it is at the neutral points, but also during the time when its electro-motive force is rising and falling at the beginning and end of an impulse.

If the insulating space is too short, so as to keep or bring a section in the circuit while its electro-motive force is low, then the current from the other sections, being of superior electro-motive force, will overcome this weak current, and discharge through this section. If the insulating spaces are a little longer than necessary, no material inconvenience results. A suitable length for practical purposes is easily determined experimentally. It is found in practice that the neutral points of the armature in motion are considerably in advance of their theoretical position, this circumstance being attributed to time required to saturate any point of the armature with magnetism, so that the given point is carried beyond the point of greatest magnetic intensity of the field before receiving its maximum charge.

It is necessary to adjust the commutator cylinder on the

revolving shaft of the machine with special reference to the neutral points of the armature when in motion, in order that its insulating space may correspond with the neutral points. This adjustment is made experimentally as follows:—The commutator cylinder having been placed approximately in its proper position, the machine is started, and the presence or absence of sparks at the points of contact between the plates and commutator cylinder is noted. If sparks occur, the commutator cylinder is turned slightly forward or backward on its axis, until the sparks disappear.

The presence of sparks when the commutator is even slightly out of its proper position is easily explained. If a break between a pair of segments and the plates occurs while the corresponding section of wire on the armature is still active, a spark is produced by the interruption of the current, while if the break occurs too late the section in question will have become neutral, and then commenced to conduct the current from the active sections; and the interruption of this passage causes a spark in this instance. If the commutator is much removed from its proper position in either direction, the sparks are so great as to very rapidly destroy both the commutator and the brushes, while the current from the machine is correspondingly diminished.

With the arrangement, where the first and last ends of each of two diametrically opposite sections are attached to two opposite segments, the intensity of the induced electric current will be that due to the length of wire in a single section only, while the quantity will be directly as the number of sections. By doubling the size of each bobbin, and diminishing their number one-half, a current of double the intensity and one-half the quantity of the former will be obtained. This effect, however, can be secured in another manner, by connecting the first and last ends of the two opposite sections together, and joining the remaining ends only to two opposite segments, as illustrated in Fig. 46. This arrangement is found most convenient in practice.

The arrangement of the cylinder with segments is usually replaced by another, in which the last end of one

section and the first end of the succeeding one may be connected with a strip of metal attached to the cylinder, parallel with its axis, as in the Siemens and Gramme machines. These metallic strips or conductors are equal in number to the sections of wire on the armature, and are insulated from each other. The plates press upon the cylinder, in this case, at points corresponding to the neutral points of the armature, thus being at right angles with their position in the first arrangement. This plan, which is the one commonly used with annular armatures, gives fair results, but is subject to a serious disadvantage from which the first is free. The difficulty is that the sections of wire, when at or near the neutral points of the armature, contribute little or no useful effect, but the current from the other sections must pass through these in order to reach the plates, thus experiencing a considerable and entirely useless resistance; and, owing to the opposite directions of the currents through the active sections on opposite sides of the neutral points, these currents, by passing through the idle sections, tend strongly to produce "consequent" points in the armature where the neutral points should be, thus interfering seriously with the theoretical distribution of the magnetism of the armature.

Fig. 46.

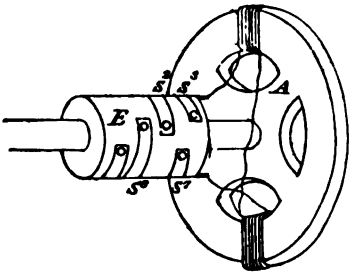

The electro-magnets H are excited by the whole or a portion of the electric current derived from the revolving armature, as is usual in apparatus of this kind, the novel feature of this part of the machine consisting of the manner in which the magnetic poles are presented to the armature; this arrangement is such that a very large proportion of the entire surface of the armature is constantly presented to the poles of the magnets, thus securing uniformity of magnetization, as well as maximum amount. The iron segments, constituting the poles of the magnets H, are arranged on both sides of the armature (Fig. 44). The pieces N N, or S S, may be connected at

their outer edges, thus forming one piece, and inclosing the armature still more. This arrangement is, in fact, adopted by the inventor for small machines, inasmuch as one electro-magnet may thus be used instead of two, the effect being the same, only less in degree, while the construction of the machine is simplified.

Of course, permanent steel magnets may be employed in these machines, instead of electro-magnets, and this substitution is advisable in small hand machines.

In other dynamo-electric machines no magnetic field is maintained when the external circuit is opened, except that due to residual magnetism; hence the electro-motive force developed by the machine in this condition is very feeble. It is only when the external circuit is closed through a resistance not too large that powerful currents are developed, owing to the strong magnetic field produced by the circulation of the currents themselves around the field magnets. Such machines are not well adapted to certain kinds of work, notably that of electro-plating. For this purpose, a machine arranged to do a large quantity of work at one operation may fail entirely to do a small quantity, because of the comparatively high external resistance involved in the latter case, and the low electro-motive force of the machine at the start. Again, during the process of electro-plating a very considerable electro-motive force is developed in the plating bath, in a direction opposed to the current from the dynamo-electric machine. If now the current is momentarily weakened, by accident or otherwise, its magnetic field, and consequently its electro-motive force, are correspondingly reduced. If the latter falls below the electro-motive force of the bath, it will be overcome by it, and the machine will have the direction of its current reversed. This accident often happens with plating machines, and is a source of much annoyance. It will now be obvious that, if even a moderately strong magnetic field be constantly maintained within the machine, both of the above-described difficulties will be eliminated. Other useful applications of a "permanent field" machine will readily suggest themselves.

By diverting from external work a portion of the current of

the machine, and using it either alone or in connection with the rest of the current for working the field magnets, the permanent field may be obtained.

The latter plan is especially useful for electro-plating machines. If the external circuit be broken entirely, the magnetic field will in the former plan remain unimpaired; and in the latter plan will remain sufficiently strong to effect the desired end.

Mr. Brush winds the cores of the field magnets with a quantity of a comparatively fine wire, having a high resistance

Fig. 47.

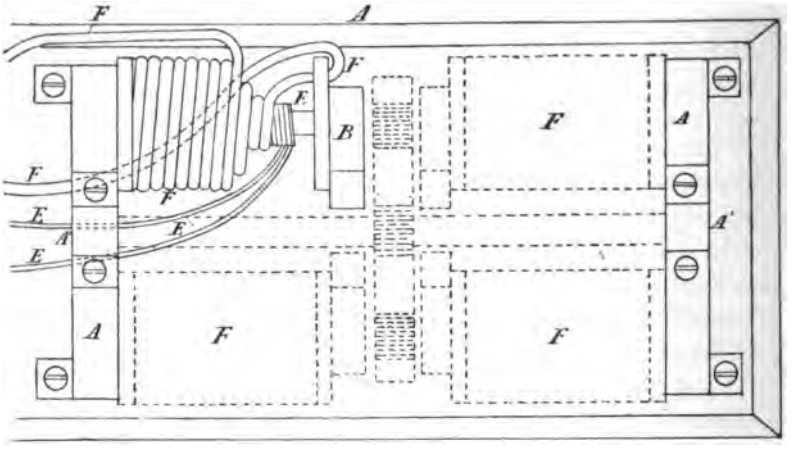

in comparison with that of the external circuit, and the rest of the wire in the machine. The ends of this wire are so connected with other parts of the machine, that when the latter is running a current of electricity constantly circulates in the wire, whether the external circuit be closed or not. The high resistance of this wire prevents the passage through it of more than a small proportion of the whole current capable of being evolved by the machine; therefore the available external current is not materially lessened. When this device, called a "teaser," is used in connection with field magnets, also wound with coarse wire (Fig. 47), for the purpose of still further increasing the magnetic field by employing the main current

for this purpose, then the "teaser" may be so arranged that the current which passes through it will also circulate in the coarse wire, thus increasing efficiency.

By this device also, in electric lighting, the total cessation of the current is prevented. In the abstract of the report of the Franklin Institute will be found the results of working this machine.

THE WALLACE-FARMER MACHINE.

In the Wallace-Farmer machine (Fig. 48), the magnetic field is produced by two horseshoe electro-magnets, but with

FIG. 48.

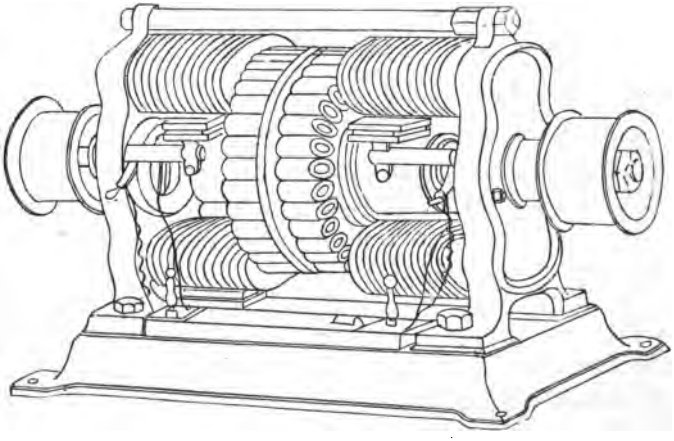

poles of opposite character facing each other. Between the arms of the magnets, and passing through the uprights supporting them, is the shaft, carrying at its centre the rotating armature. This consists of a disc of cast iron, near the periphery of which, and at right angles to either face, are iron cores, wound with insulated wire, thus constituting a double series of coils. These armature coils (Figs. 49 and 50) being connected end to end, the loops so formed are connected in the same manner, and to a commutator of the same construction as that of the Gramme. As the armature rotates the cores pass between the opposed north and south poles of the field magnets, and the current generated depends on the

change of polarity of the cores. It will be seen that this constitutes a double machine, each series of coils, with its commutator, being capable of use independently of the other;

FIG. 49.

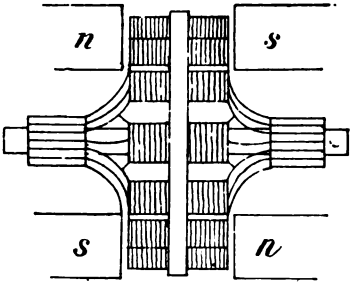

FIG. 50.

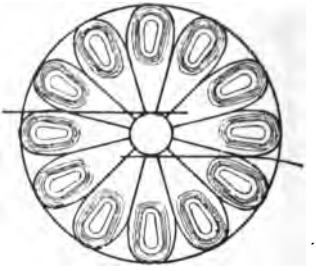

but in practice the electrical connections are so made that the currents generated in the two series of armature coils pass through the field-magnet coils, and are joined in one external circuit. This form of armature also presents considerable uncovered surface of iron to the cooling effect of the air; but its external form, in its fan-like action on the air, like that of the Brush, presents considerable resistance to rotation. In the Wallace-Farmer machine there is considerable heating of the armature, the temperature being sometimes sufficiently high to melt sealing-wax.

SIEMENS' EARLIER MACHINE.

Continuing the historical arrangement of our description, the most important innovation brought to bear on induction machines giving alternating currents is the longitudinal coil devised by Siemens and Halske, of Berlin, in 1854. The iron of this coil is cylindrical in form, hollowed out parallel to its axis in two large and deep recesses, so that its transverse section resembles an I. The copper wire, insulated, is wound in the recesses parallel to the axis of the cylinder, and, with part of the iron left uncovered, constitutes a complete cylinder. One of the ends of the wire is soldered to the metallic axle of the cylinder, and the other to a metal ring insulated on the extremity of this axle.

Fig. 51 represents one of these earlier Siemens' machines. The armatures of the magnet embrace the coil very closely,

FIG. 51.

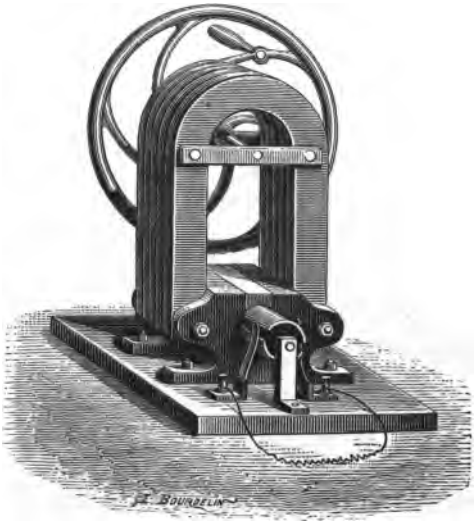

just permitting its rotation. The coil acts as the iron keeper usually furnished to magnets to prevent loss of power.

THE "ALLIANCE" MACHINE.

The "Alliance" magneto-electric machine, invented by Nollet and Van Malderen (Fig. 52), is constructed with a certain number of bronze plates, C, each carrying at their circumference 16 coils. These plates are mounted on a horizontal axle actuated by a motor through a belt, and revolve between eight series of compound magnets, B B, set radially around the axis and supported parallel to the plane of the plates by a special framework. As each magnet has two poles, one series presents 16 poles regularly distanced. There are as many poles as there are coils, so that when one is facing a pole the 16 others are also facing poles. These machines usually have four or six plates, corresponding to 64 coils and 40 permanent magnets and

96 coils and 56 permanent magnets respectively. One of the poles for the total current is attached to the axle,

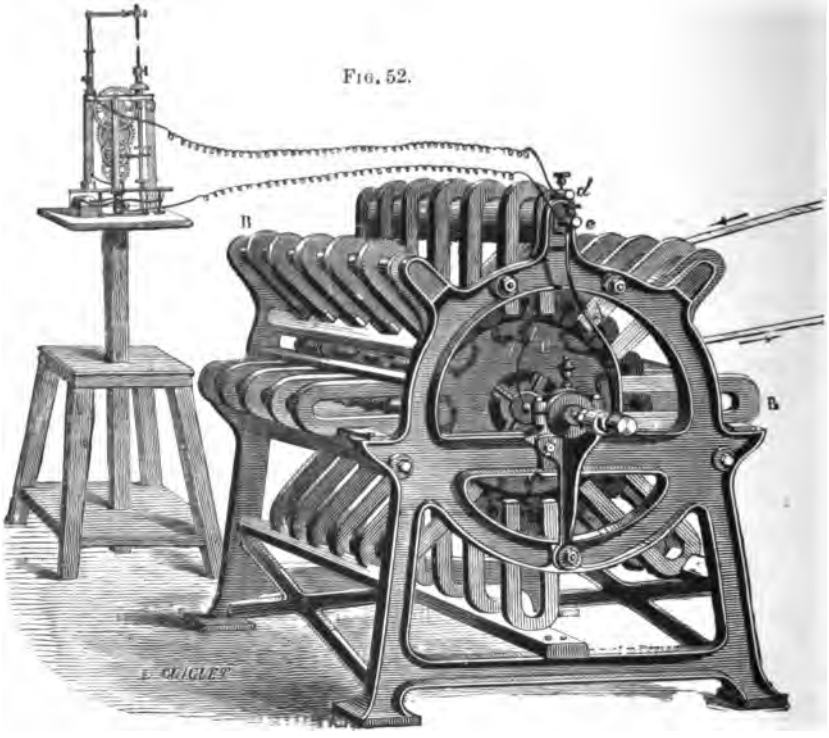

Fig. 52.

which is in communication with the frame by means of the bearings; the other pole terminates in a ring concentric to the axle and insulated from it. The current changes its direction every time a bobbin passes before the magnet poles. As there are 16 magnet poles there are 16 changes per revolution, and as the machine makes 400 revolutions per minute, there will be at least 100 changes of direction per second.

Le Roux gave, before the *Société d'Encouragement*, details of the theory, construction, and working of the Alliance machine. It necessarily occurs that at each change of polarity the intensity of the current should pass zero. Thus 100 times per second the spark ceases to play between

the two carbons. The light does not appear discontinuous. This is due to the well-known persistence of light on the retina, and also to the fact that the true voltaic arc only produces a fraction of the electric light, the remainder being due to the incandescence of the carbons.

The tension of the current is insufficient to cause the spark to play to the distance between the cold carbons, but when these are raised to incandescence by the passage of the current, the surrounding atmosphere becomes better conducting by the elevation of temperature, and, doubtless also, by the presence of carbonaceous particles; the duration of the interruptions being very short, the properties of the atmosphere surrounding the carbons have not time to become sensibly modified, and the current recommences to pass.

FIG. 53.

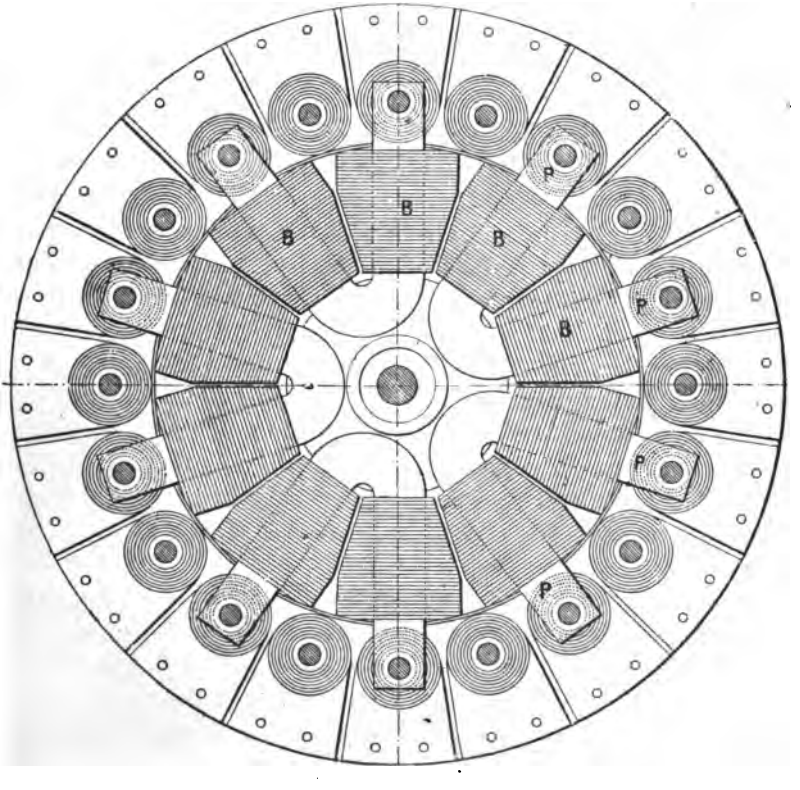

HOLMES' MACHINE.

In Holmes' magneto-electric machine for the production of light (1869), (Fig. 53), instead of the coils revolving before the magnets, the magnets revolve before the coils. Part of the current produced is employed to magnetize the electro-magnets; and the coils can give several independent circuits, and produce several independent lights. This is returning to the principle of the Pixii machine.

WILDE'S MACHINE.

Wilde's machine (Fig. 54) consists of two Siemens' apparatus superposed and of unequal dimensions, with the modification that, in the larger, the magnet is replaced by a powerful electro-magnet. The upper and smaller machine is intended to magnetize the electro-magnet, and is termed the exciting machine. Between the two arms of the magnet a longitudinal bobbin revolves, developing alternating currents, which are redirected by a commutator and led to the electro-magnets by wires connected to two terminals. Beneath is the large electro-magnet, the two branches of which are constructed of plates of sheet iron; and for the elbow of the horse-shoe is substituted a plate of iron carrying the exciter. The poles of this electro-magnet are masses of iron separated by a copper plate, and form a cylindrical cavity in which revolves the second Siemens' bobbin. This part of the apparatus is termed the generator. The two bobbins are similar; but the diameter of the larger is three times that of the other. The exterior conducting wires are attached to its poles. The insulated copper wire which covers the branches of the large electro-magnet are carried to terminals of the exciter. By the aid of two driving belts and a proper motor, the two bobbins are caused to revolve—the smaller with a velocity of 2400 revolutions per minute, the larger with a velocity of 1500 revolutions per minute. The currents induced in the exciter maintain the larger electro-magnet strongly magnetized, and the currents induced in the generator are utilized in exterior

work. Their intensity is considerably superior to that of the currents from the exciter.

FIG. 54.

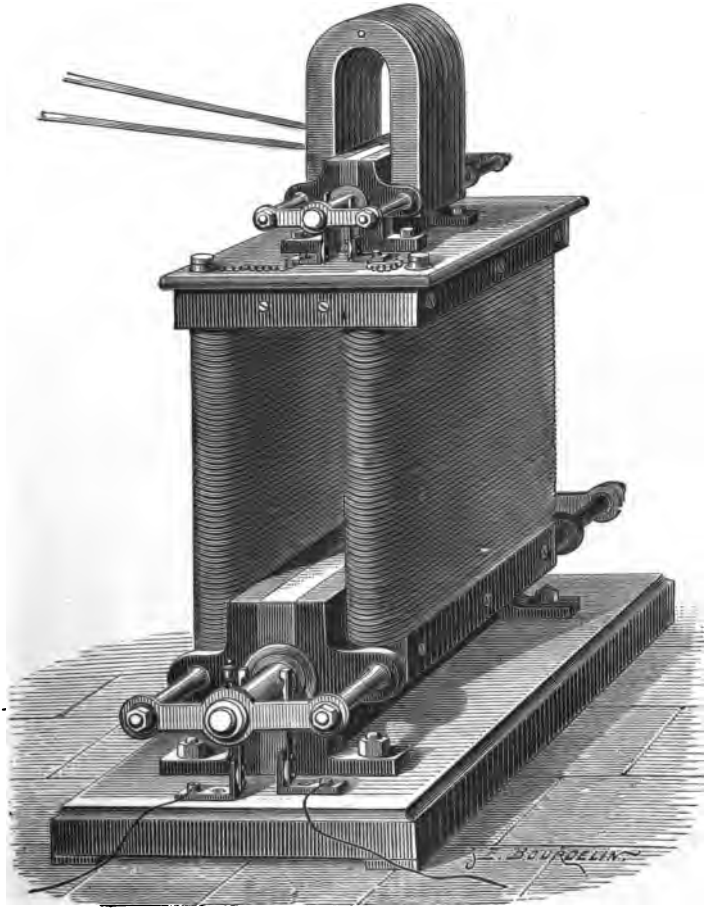

LADD'S MACHINE.

Ladd's machine (Fig. 55) consists of two parallel electro-magnets, at the extremities of which are placed two Siemens' bobbins of different sizes. The small bobbin excites the electro-magnets, and these react on the large bobbin which

furnishes the working current. The wires from the electro-magnets are so connected as that the contrary poles will be in relation when a single current passes. The free ends of these wires are carried to terminals, where they receive

FIG. 55.

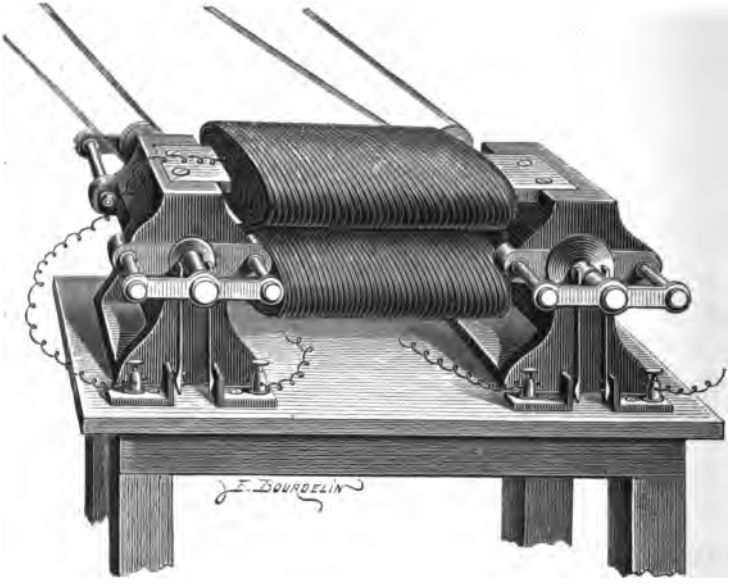

the currents from the small bobbin. Ladd's machine is based on the principle of mutual accumulation previously described.

TROUVÉ'S MACHINE.

Trouvé's machine is composed of two or more electro-magnets in permanent magnetic contact, and participation in a rotary movement, like the trains of a rolling mill. The magnetic and electric circuits are, therefore, both closed.

The application of the principle requiring play of all the parts, the exit and entrance of the currents are made through the axles, which are hollow, and admit in the centre the insulated conductors (Figs. 56 and 57, representing front and side views of a machine). The machine consists of a strong,

straight electro-magnet, influencing a series of straight electro-magnets, forming a circular bundle. The whole system is set in rotary motion by the large electro-magnet, which also serves as a regulator. The machine can give either reciprocating or continuous currents, like the Gramme machine,

FIG. 56.

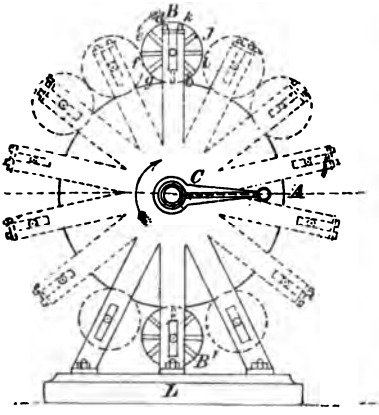

FIG. 57.

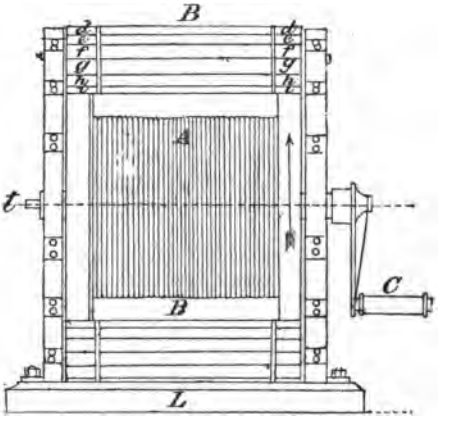

according to the arrangement of the commutator. It is either magneto or dynamo-electric, according as an electro-magnet or a permanent magnet is employed.

If the motion is such as indicated by the arrow, all the electro-magnets, *d e f g*, placed at the left of the perpendicular, passing by the centre or axis, approach the large electro-magnet, which affects them, and generates in their respective bobbins positive currents; all the electro-magnets on the right of the perpendicular, *h i j k*, receding from the great electro-magnet, are influenced by negative currents. A special commutator collects these currents, either to use them in quantity or in derivation, or to give them in tension.

Fig. 58 represents a Gramme machine arranged on this principle. The two electro-magnets M M′ are in permanent contact, by their opposite poles, with the discs N N′, thus forming a single magnet, for which one of the discs serves as a shank, and the other as an armature, constituting a completely closed magnetic circuit.

Fig. 59 represents, in section, one of the two discs N N′, which are mounted on the common axle O. When they are

Fig. 58.

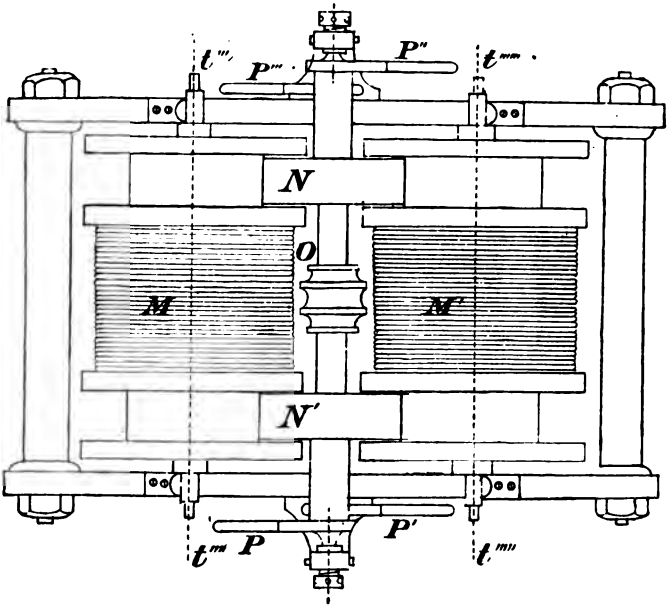

set in motion, they communicate a rotary motion to the two electro-magnets, which influence them continually and thus generate currents in the series of bobbins which form the discs. The contact becomes more complete between M M′ and N N′, in proportion as the currents are stronger; in other words, as the speed of the machine increases. The following references are self-explanatory:—

Fig. 59.

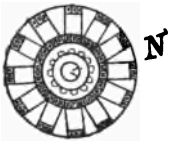

A, large electro-magnet, serving as fly-wheel by the crank C, or by a pulley mouned on its axle. B B′, cluster formed of the small electro-magnets, *d e f g h i j k;* C, crank; L, support.

N N′, modified Gramme discs, moving the two electro-magnets, *M M′*, which influence them. *O*, pulleys to set the axle in motion. *P P′ P″ P‴*, friction-springs, collecting the

currents which are generated in the discs. *t t′ t″*, extremities of the coils of the electro-magnets.

This machine yields, for each of its discs, a light equivalent to 600 Carcel burners.

RAPIEFF'S MACHINE.

Very little is really known about this machine. The inventor has patented a subdivision of the core of the electro-magnets, forming, like Trouvé, the core as a bundle of very thin electro-magnets. This arrangement is stated to give greater magnetic power. Further, M. Rapieff patents what he terms "two-sided" inductors, in which the two sides of the inducing and induced magnets are utilized. The latter portion of the invention has been partially utilized by Brush. Regarding this part of the principles of the machine, M. Rapieff says:—

"The induction of currents being generally produced in dynamo-induction machines by means of setting some armatures in motion with respect to some inductors, or inversely, coiled rings, cylinders, or prisms can be applied to such machines, either as both electro-magnets and anchors, or only as electro-magnets or as anchors.

"The ring-shaped apparatus in which the currents are induced, or armatures, and the inductors or electro-magnets of the same construction through which the currents are sent, can be combined together in different ways; but these various combinations may be considered as modifications of the following kind of arrangement:—

"Several ring-shaped inductors, A A A (Fig. 60), and several armatures of the same shape and arrangement, B B B, are disposed alternately side by side in planes normal to their common axis, the spaces between them being rendered as small as possible. The armatures B B B are fitted in some manner on a common shaft, wherewith they are caused to rotate, while

FIG. 60.

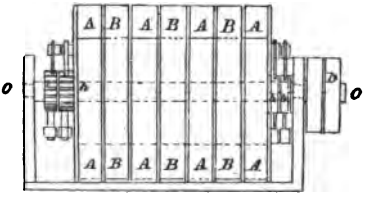

the inductors A A A, being secured on a frame or stand, remain fixed or inversely. The number and size of both inductors and armatures depend upon the special purpose they are employed for; the induction being produced in that case from both sides of each armature, it is termed a two-sided one."

This machine is considered by some electricians to promise much, but to this date the results of the experiments have not been published.

GRAMME'S MACHINE.

The machine invented by M. Gramme is essentially different from all others. Since the date of the first application, success has been on the increase; the inventor has been rewarded at Lyons, Vienna, Moscow, Linz, and Philadelphia. More than 400 machines have been made. Electric lighting did not exist industrially before M. Gramme's invention.

Principle of the machine.—To comprehend the principle of the Gramme machine there is required a more complete analysis of the phenomena than is ordinarily attempted. Given (Fig. 61) a magnetized bar, A B, and a conducting helix in reciprocating movement, if the helix is brought towards the bar from its position at X, an induced current is produced at each movement.

FIG. 61.

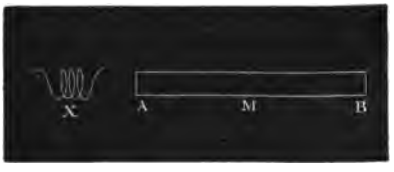

These currents are in the same direction while the helix passes the middle M of the bar A B, until it leaves the opposite pole B.

Thus, in the entire course of the helix on to and from the magnet, two distinct periods are to be distinguished: in the first half of the movement the currents are direct, and in the second they are inverted. If, instead of moving from left to right, as we have supposed, the movement is from right to left, everything occurs as before, with the exception that the currents are opposite.

Let two magnets, A B and B′ A′ (Fig. 62), be placed end to end, in contact by poles of the same name, B B′. The whole

FIG. 62.

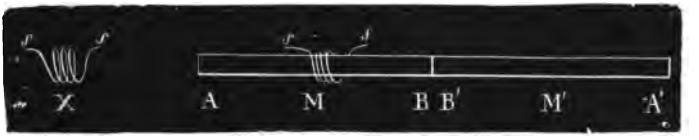

forms a single magnet with a consequent point at the centre. If the helix is moved with relation to this system, it is traversed by a positive current during the first movement, between A and B; by a negative current in the second, from B to B′; again by a negative current in the third, from B′ to A′; and finally by a positive current, when leaving A′.

Replacing the straight magnets by two semicircular magnets (Fig. 63) put end to end, the poles of the same name together, there occur the two poles A A′, B B′, and the results are the same as in the preceding, M M′ being the two neutral points.

FIG. 63.

The essential part of the Gramme machine is a soft-iron ring, furnished with an insulated copper helix, wound on the whole length of the iron. The extremities of this helix are soldered together, so as to form a continuous wire without issuing or re-entrant end. If the wire is denuded exteriorly, the part bared forms a straight band running round the whole of the circumference. Friction-pieces, M and M′, are applied to the bared part of the helix (Fig. 64). When the ring is placed before the poles S and N of a magnet, the soft iron is magnetized by induction, and there occur in the ring two poles, N′ and S′, opposed to the poles S and N. If the ring revolves between the poles of a permanent magnet, the induced poles developed in the ring

always remain in the same relation with regard to the poles N and S, and are subject to displacement in the iron itself with a velocity equal, and of contrary direction, to that of the

FIG. 64.

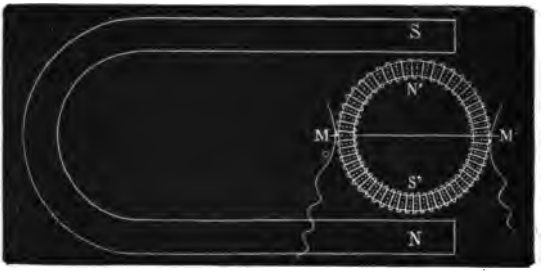

ring. Whatever may be the rapidity of the movement, the poles N′ S′ remain fixed, and each part of the copper helix successively will pass before them.

An element of this helix will be the *locale* of a current of a certain direction when traversing the path M S M′, and of a current of inverse direction to the first when passing through the path M′ N M. And, as all the elements of the helix possess the same property, all parts of the helix above the line M M′ will be traversed by currents of the same direction, and all parts beneath the line by a current of inverse direction to the preceding.

FIG. 65.

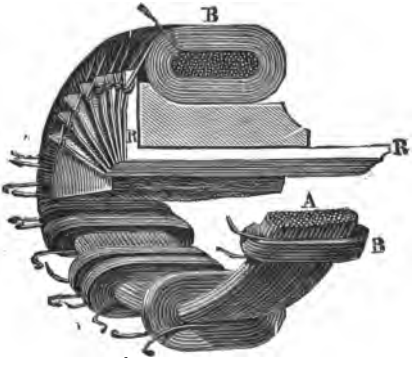

These two currents are evidently equal and opposite, and balance one another. When two voltaic batteries, composed of the same number of elements, are coupled in opposition, it is necessary only to put the extremities of a circuit in communication with the poles common to

GENERAL LIBRARY University of MICHIGAN

the two batteries, and the currents become associated in quantity.

M. Gramme collects the currents developed in the ring of his machine by establishing collectors on the line M M′, where the currents in contrary direction encounter each other.

In practice Gramme does not denude the wire of the ring. Fig. 65 shows the wire and coils. One or two coils, B, are shown in position, and with the iron ring laid bare and cut.

Insulated radial pieces, R, are each attached to the issuing end of a coil, and to the entrant end of the following coil.

Fig. 66.

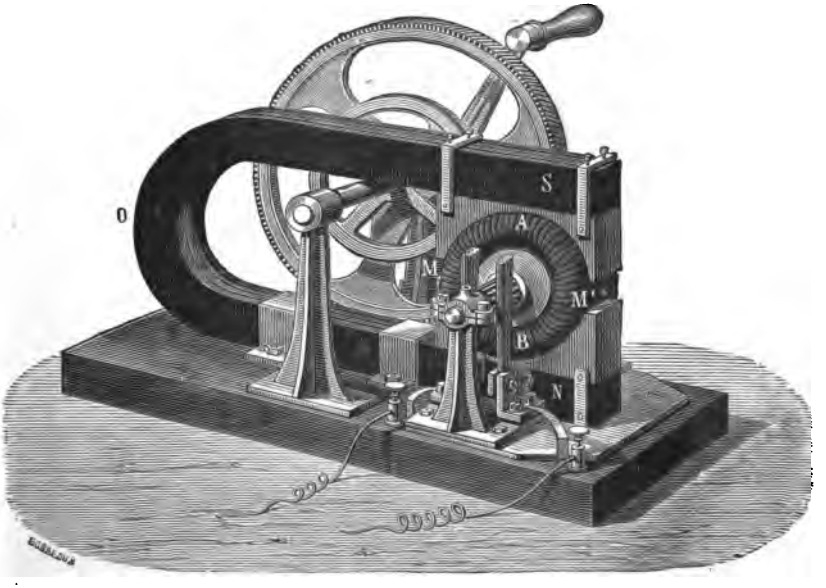

The currents are collected on the pieces R, as they would be on the denuded wire. Their bent parts, brought parallel to the axle, are carried through and beyond the interior of the ring, and are brought near one another upon a cylinder of small diameter (Fig. 66). The friction-brushes on the pieces R are in a plane perpendicular to the polar line A and B; that is, at the middle or neutral points M and M′. The intensity of the current increases with the velocity of rotation; the electro-motive force is proportional to the velocity.

Gramme modifies his machine so as to produce effects of tension or of quantity by winding the ring with fine or coarse wire. It appears indisputable that with equal velocities of the ring the tension will be proportional to the number of

Fig. 67.

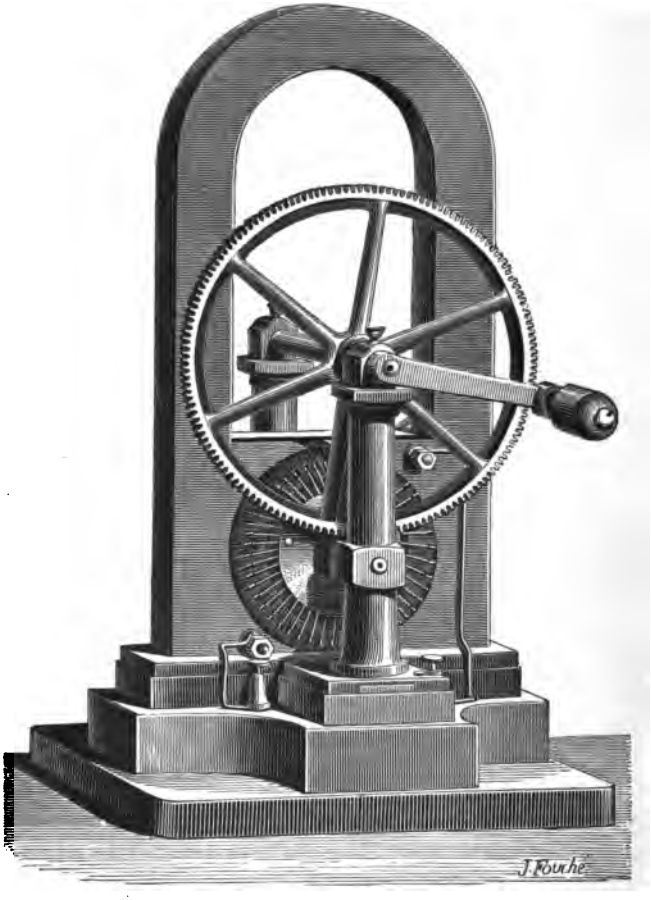

convolutions of the wire; but the internal resistance increases in the same proportion, and in the majority of cases the best results are obtained by employing thick wires.

Various machines have been constructed on the Gramme

principle for experimental purposes. The first type of this apparatus was horizontal (Fig. 66); it gave a current equivalent to nearly three ordinary Bunsen elements. This was replaced by a more rational arrangement (Fig. 67), which produced the current of five elements without changing the bobbin. Since the invention by M. Jamin of laminated magnets, nearly all the laboratory machines have been constructed with magnets on this system. Some are turned

FIG. 68.

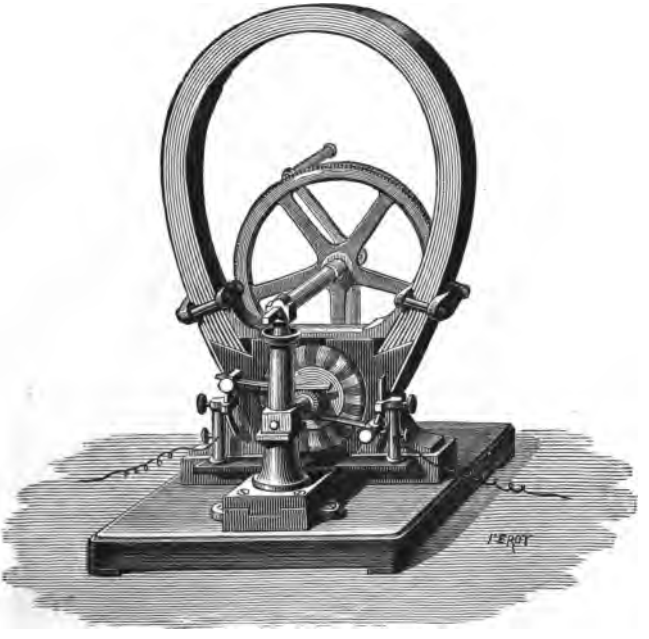

by a wooden handle (Fig. 68); others with a pedal (Fig. 69). These machines are now equivalent to eight ordinary Bunsen elements. All know that the inconvenience of mounting several Bunsen elements often deters the undertaking of an otherwise simple experiment.

The first light-machine constructed by M. Gramme gave a light of 7000 to 8000 candle-power. Its total weight amounted to 2200 lbs. It had three movable rings and six bar electro-

magnets. One of the rings excited the electro-magnet, the other two produced the working current. The copper wound on the electro-magnets weighed 550 lbs.; that of the three

FIG. 69.

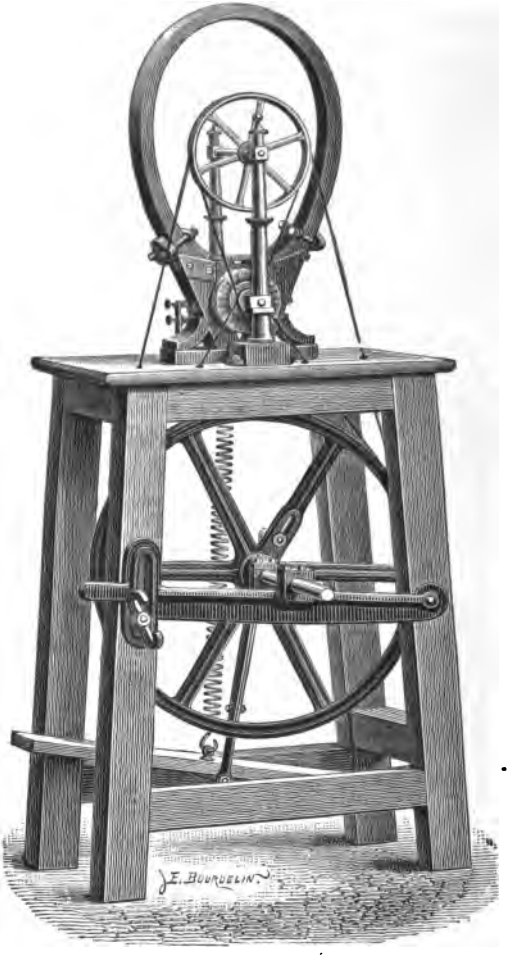

rings, 165 lbs. The space necessitated was 31½ inches length, by 4 feet 1¼ inches height.

This machine, which lighted the clock-tower of the Houses

of Parliament, became slightly heated, and gave sparks between the metallic brushes and the bundle of conductors on which the current was collected.

FIG. 70.

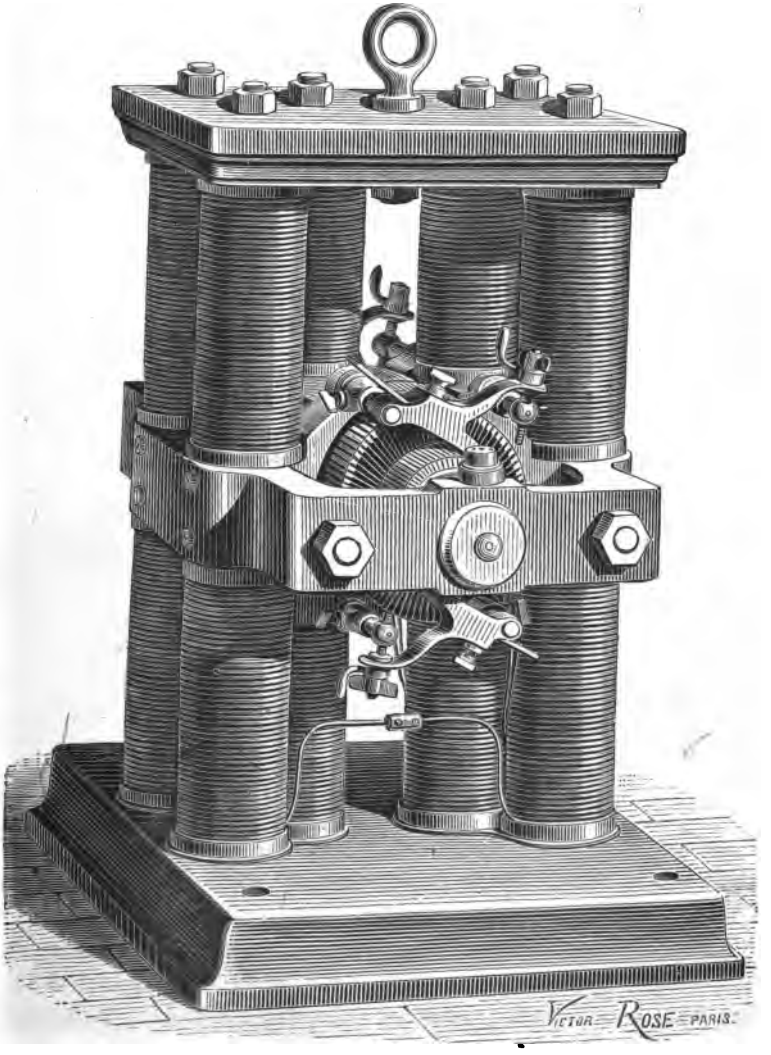

Fig. 70 is a machine with six bar electro-magnets; but,

instead of being in two right lines, these magnets are grouped in triangles. Two rings admit of conveying the total current into the electro-magnet, or of magnetizing the electro-magnets with one of them, or of producing two separate lights. This machine weighs 1540 lbs.: its height is 35½ inches; its width, 2 feet 1½ inches. The weight of copper wound on the electro-magnet bar is 396 lbs.; that of the two rings, 88 lbs. It produces a normal light of 4000 candles, raised in experiments at great velocity to nearly double. When a current is sent

FIG. 71.

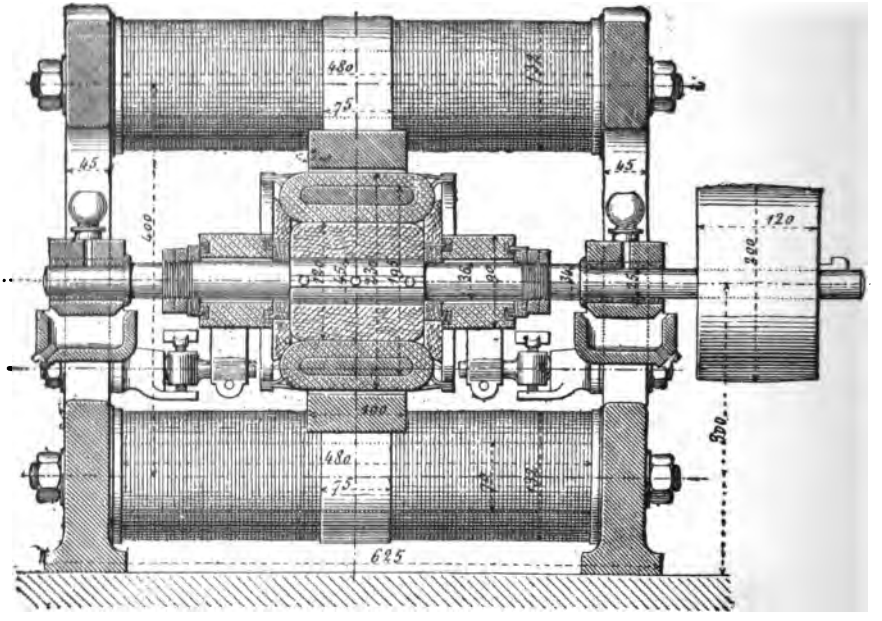

into two lamps, each gives 1200 candle power, at 400 revolutions per minute. No inconvenient heating is incurred in the bobbin or in the electro-magnets.

Figs. 71 and 72 are of a superior machine. It consists of two flanks of cast iron, arranged vertically and connected by four iron bars, serving as cores to electro-magnets. The axle is of steel; its bearings are relatively very long. The central ring, instead of being constructed with a single wire attached

by equal fractions to a common collector, is formed of two bars of the same length, wound parallel on the soft iron, and connected to two collectors to receive the currents. The poles of the electro-magnet are of large size, and embrace seven-eighths of the total circumference of the central ring. Four brushes collect the currents produced. The electro-magnet is placed in the circuit. The total length of the machine, pulley in-

FIG. 72.

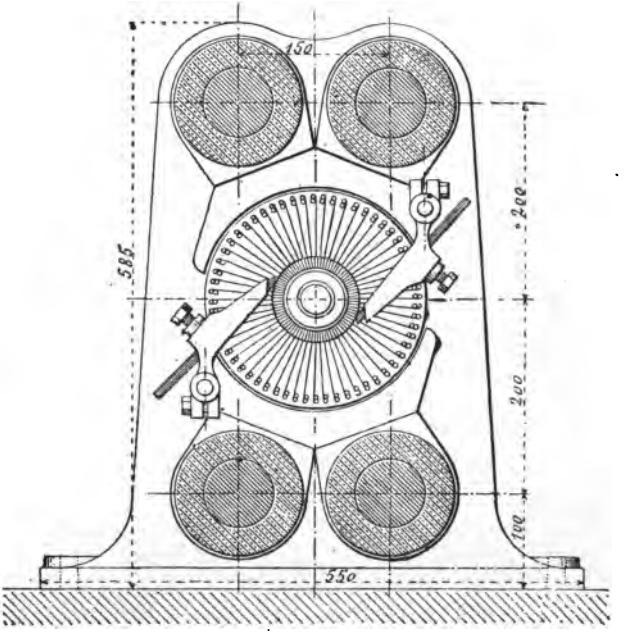

cluded, is 31½ inches; its width, 1 foot 9½ inches; and its height, 23 inches. Its weight is 880 lbs.

The double coil is connected to 120 conductors, 60 on each side. Its exterior diameter is eight inches. The weight of wire wound on is 31 lbs. The electro-magnet bars have a diameter of 2½ inches, and a length of 15¾ inches. The total weight of wire wound on the four bars is 211 lbs. The winding of the wires on the ring is effected as if two complete bobbins were put one beside the other, and these two bobbins may be con-

nected in tension or in quantity. Coupled in tension, they give a luminous intensity of 6400 candle-power at 700 revolu-

FIG. 73.

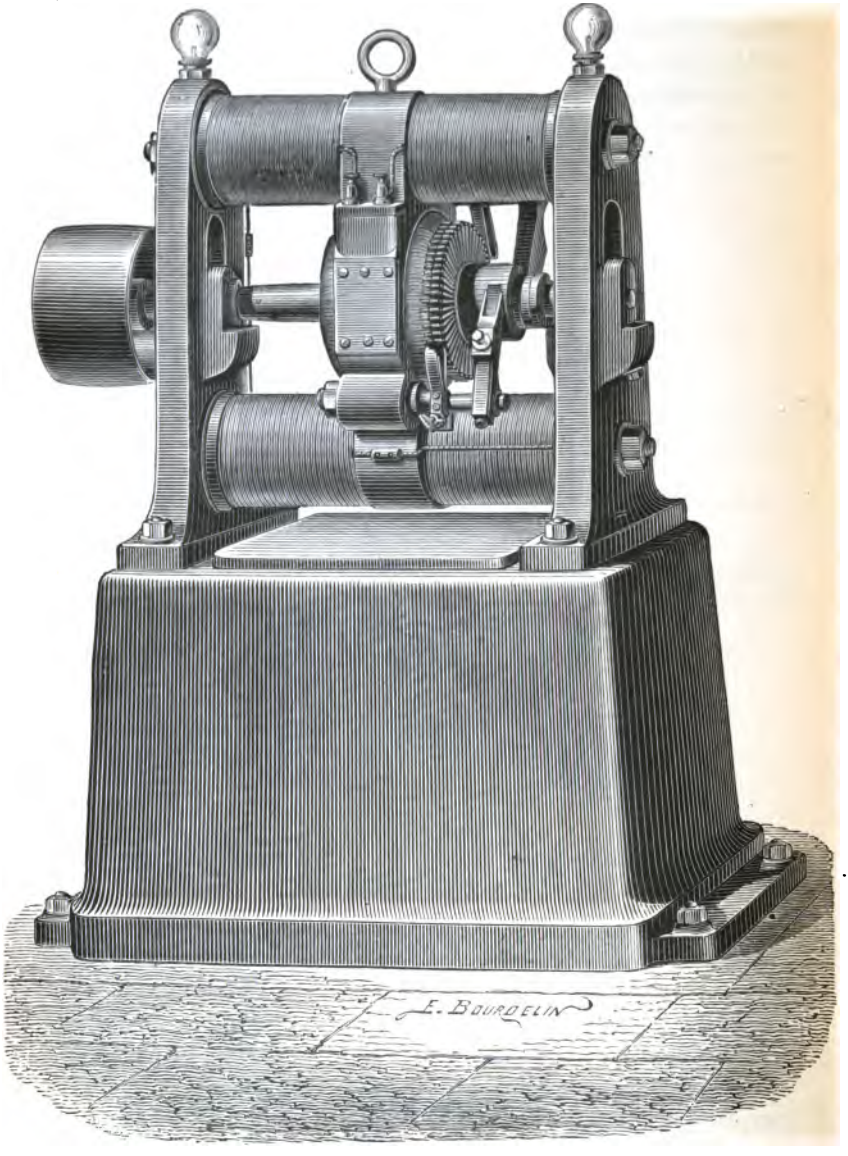

tions per minute; coupled in quantity, they give 16,000 candle-power with 1350 revolutions per minute.

Fig. 73 represents the type adopted for workshops and large covered spaces. This machine weighs 396 lbs.; its height is 23½ inches, its width is 13¾ inches, and its length, pulley included, 25½ inches. The base weighs 260 lbs., and is 15¾ inches in height.

The copper wound on the electro-magnet bars weighs 62 lbs., of which the ring weighs 10 lbs.

With so little copper and only 900 revolutions per minute, 11,520 candle-power light is obtained, the axis of the two carbons being exactly in the same plane.

The following table gives the results obtained with a Gramme machine of the workshop type, a Serrin lamp, and Gaudoin carbons. The motive power employed did not exceed 2 h.-p. when the machine was making 820 revolutions, and 3 h.-p. at 900 revolutions. The lamp was distant 200 yards from the machine feeding it, and kept at a height of 15 feet.

No. of Revolutions.	Distance of Observer from Lamp.	Candle-power light.	Remarks.
	Feet		
820	135	2464	The current was too feeble to maintain the carbons ⅛ in. apart.
820	67½	3600	
820	30	4120	
820	15	4800	
820	7½	4896	
870	135	3200	Distance apart, ⅛ in. regularly. Working satisfactorily.
870	67½	4400	
870	30	6480	
870	15	8800	
870	7½	9040	
920	135	3616	Too high tension. The carbons heat for considerable length. The light unsteady.
920	67½	5632	
920	30	9656	
920	15	11360	
920	7½	11520	

SIEMENS' DYNAMO-ELECTRIC MACHINE.

With this machine (Figs. 74 and 75), the electric current is produced by the rotation of an insulated conductor of copper

wire or armature coiled in several lengths, say 8, 12, 16, up to 28, and in several layers, longitudinally, upon a cylinder with a stationary iron core $n\ n_1\ s\ s_1$, so that the whole surface of the armature is covered with longitudinal wires and closed at both ends. This revolving armature is inclosed to the extent of two-thirds of its cylindrical surface by curved soft-iron bars.

FIG. 74.

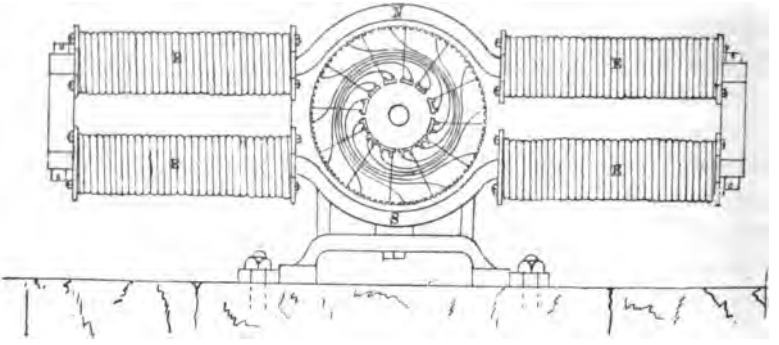

FIG. 75.

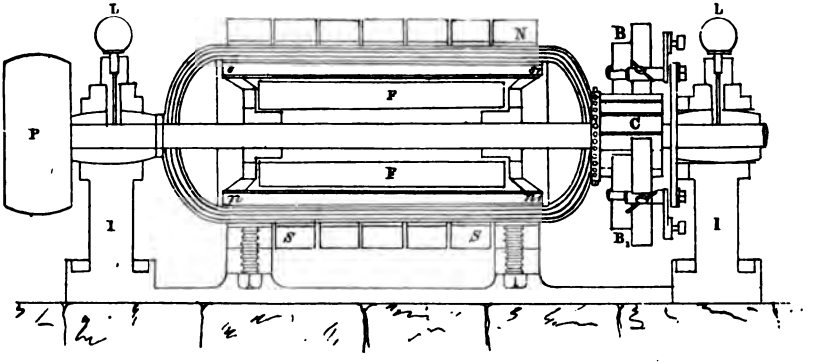

The curved bars are the prolongations of the cores of the electro-magnets E E E E. The coils of the electro-magnet form with the wires of the revolving armature one continuous electric circuit, and when the armature is caused to rotate, an electric current (which at first is very feeble) is induced by the remanent magnetism in the soft-iron bars and directed through

the collecting brushes into the electro-magnet coils, thus strengthening the magnetism of the iron bars, which again induce a still more powerful current in the revolving armature. The electric current thus is increased on the principle of mutual accumulation.

At each revolution the maximum magnetic effect upon each convolution of the armature is produced just after it passes through the middle of both magnetic fields, which are in a vertical plane passing through the axis of the machine. The minimum effect is produced when in a plane at right angles or horizontal.

According to the law of Lenz, when a circuit starts from a neutral position on one side of an axis towards the pole of a magnet, it has a direct current induced in it, and the other part of the circuit which approaches the opposite pole of the magnet has an inverse current induced in it; these two induced currents are, however, in the same direction as regards circuit. A similar current will also be induced in all the convolutions of wire in succession as they approach the poles of the magnets.

These currents, almost as soon as they are induced, are collected by brushes, B, placed in contact with the commutator in the position which gives the strongest current. The position giving the strongest current gives also the least spark at the commutator.

The circumference of the revolving armature is divided into an even number of equal parts, each opposite pair being filled with two coils of wires, the ends of which are brought out and attached to a commutator, as shown in Fig. 74.

The Siemens machine is stated to give the following results for the various sizes :—

Revolutions per minute.	Illuminating power. Standard candles.	Horse-power.	Weight. lbs.
850	1200	2	280
650	6000	4	420
360	14000	8	1288

Only one Siemens or Serrin lamp can be burnt in the circuit of one of these machines.

EDISON'S MACHINE.

The extraordinary interest excited by the anticipation of the results likely to attend an invention proceeding from so able a mechanician as Mr. T. A. Edison, has given special importance to this machine, which is thus described: "It has long been known that if two electro-magnets, or an electro-magnet and a permanent magnet, be drawn apart or caused to pass each other, electric currents will be set up in the helix of the electro-magnet. It has also been known that vibrating bodies, such as a tuning fork or reed, can be kept in vibration by the exercise of but little power. I avail myself of these two known forces, and combine them in such a manner as to obtain a powerful electric current by the expenditure of a small mechanical force."

As regards this combination of principles, it would appear that Mr. Edison has been misled by analogy in circumstances. Movement in a magnetic field of any closed circuit is always attended by an expenditure of power equivalent to the work done by the current set up in the closed circuit. The well-balanced coil of a Gramme machine can be turned by a child when its circuit is incomplete, but to cause the coil to revolve under the influence of the intense magnetic field existing when the circuit is closed and the machine is in action, requires the exertion of considerable force. The coil, as connected in working a Gramme machine with its belt communicating with shafting on which is a large and heavy fly-wheel, is quickly brought to rest, when the working electric circuit remains closed.

Fig. 76 represents a tuning-fork, A^2, firmly attached to a stand, B^2. This fork is preferably of two prongs, but only one might be employed, upon the principle of a musical reed. The vibrating fork may be two yards in length, and heavy in proportion. It has its regular rate of vibration, and the mechanism that keeps it in vibration is to move in harmony. A crank or revolving shaft may be employed, but it is preferred to use a small air, gas, or water engine, applied to each end of the fork. The cylinder A^1 contains a piston and a rod, B^1,

connected to the ends of the fork, and steam, gas, water, or other fluid under pressure acts within the cylinder, being

FIG. 76.

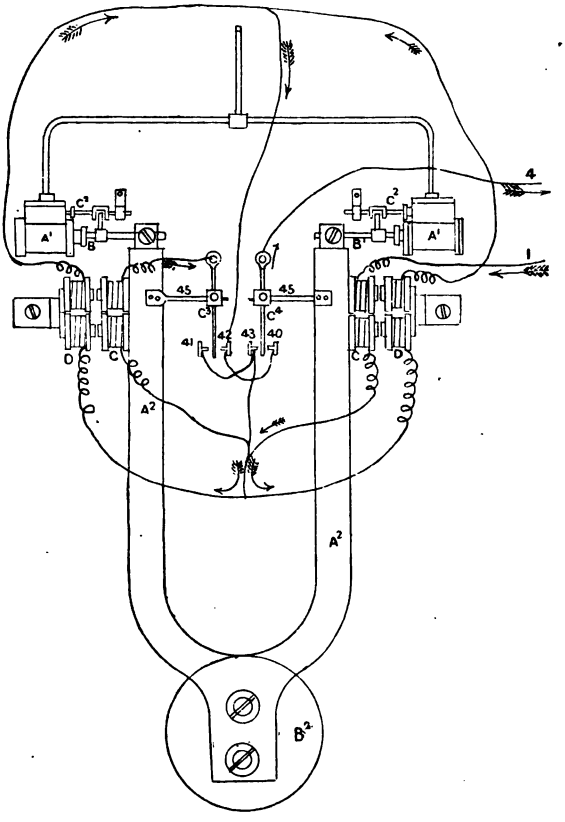

admitted first to one side of the piston and then the other by a suitable valve. The valve and directing rod C^2 are shown for this purpose. The fork A^2 may be a permanent magnet or an electro-magnet, or else it is provided with permanent or electro-magnets. An electro-magnet, C, is shown on each prong of the fork, and opposed to these are the cores of the electro-magnets D. Hence, as the fork is vibrated, a current is set up in the helix of each electro-magnet, D, in one direction as the cores approach each other, and in the opposite direction

as they recede. This alternate current is available for electric lights, but if it is desired to convert the current into one of continuity in the same direction, a commutator is employed, operated by the vibrations of the fork to change the circuit connections in each vibration, and thereby make the pulsations continuous on the line of one polarity. A portion of the current thus generated may pass through the helices of the electro-magnets C, to intensify them to the maximum power, and the remainder of the current is employed for any desired electrical operation. The commutator springs or levers, C^3 and C^4, are operated by rods 45. When the prongs of the fork are moving from each other, the contact of the levers C^3 C^4 will be with the screws 40, 41, and the current will be from line 1 through C to C, thence to C^3 and to 41, 43, and to the electro-magnets D D; from these by 42 to 40, C^4 and line, as shown by the arrows. When the prongs A^2 are vibrating towards each other, the circuit will be through C^3 C C^3 42, in the reverse direction through the circuit and magnets D D to 43, and by C^4 to line.

Nothing is known of the power or work equivalent of this machine, and indeed it is difficult to see how, with the dimensions given, the machine is to work at all. For instance, a tuning-fork, with its prongs two yards in length, will vibrate less than once in two seconds, so that considerable force must be expended to overcome the rigidity of the prongs to produce the many hundred vibrations per second actually required. Mr. Edison's reputation as an inventor, however, leads to the hope that the principle, which is so far new in its application, may receive extension at his hands to a more practicable form, and of this it is certainly susceptible.

DE MERITENS' MACHINE.

This machine needs no illustration, because, from its simplicity, it is readily to be understood, both in practice and principle. Suppose a wheel, the tire of which is divided into segments, each of these segments being wound with insulated copper wire, forming a separate electro-magnet. Thus the wheel is composed of a series of electro-magnets, the north

pole of one following the south pole of the adjacent magnet. Each electro-magnet, when the wheel is without action, stands with its poles beneath the poles of a horseshoe permanent magnet. These permanent magnets are set in a fixed frame around the periphery of the wheel of electro-magnets. The insulated wires on the cores of the armature of the machine are all wound in the same direction, only the outer end of the wire of one coil is connected with the outer end of the wire of a coil next to it; whilst the inner end of the wire of the one coil communicates with the inner end of another coil next to it. The alternating currents produced are thus of the same sign throughout the whole ring.

The two terminals of the wire on the ring, which constitute the two poles, the signs of which change every moment, since the currents are alternating, communicate respectively with two copper rings fixed on the axis of the machine, and insulated from it. Two thick copper wires are in frictional contact with these rings, and are connected to terminal screws, from which the current is obtained, precisely as in the case of the Alliance machine.

This machine has given very high results, which will be found detailed in the chapter on "Lighthouse Illumination." The want of continuity in the iron core of the armature of this machine materially aids in strengthening the currents obtained, since the rapid changes due to reversals of magnetism are added to the rapid realizations of Lenz' law.

REACTIONS OCCURRING IN THE PRECEDING MACHINES.

Very inaccurate theories have been pronounced in respect to the recently devised dynamo-electric machines, from the want of actual experiment and from too great reliance upon apparently rational deductions. This has been very clearly pointed out by the Count du Moncel. The following experiments, easily repeated, lead to more conclusive ideas than those usually described in the text-books.

The direction of a current, due to increment or decrement of the strength of a magnet, is the same, whether the north or south pole is operated upon successively or simultaneously,

whatever may be the position of the helix upon the magnet. The currents will be stronger as the excitation occurs nearer the helix. If the helix is placed at the middle of the magnet, or at the neutral line, the current of superexcitation which will result from placing an iron armature upon either of the poles will be inverse, and will produce a current of (say) 2, whilst the current produced by withdrawing the armature will be direct and of the same strength. By operating simultaneously upon the two poles, with two armatures, the current will be in the same direction, and of strength expressed by 7. If the coil is placed at one of the poles, say south, the currents of superexcitation and reduction will be of 10 to 12 in value, when the armature is placed upon or removed from the south pole; and these will be only 0·25 in value when the north pole is operated upon, and only 9 when the armature operates upon both poles simultaneously. When the coil is placed half-way between the north pole and the neutral line, an inverse current will be produced when an armature is approached to either of the poles; but it will be only 5 in value when the north pole is operated upon, and 2 when the south pole is approached. With an armature simultaneously applied to both poles, the value of the current will be 9, and this value and effect reversed when the armature is withdrawn.

Suppose a few turns of insulated wire to be wound around a powerful bar magnet, the extremities of this wire being connected with a distant galvanometer, and let the coil thus formed be easily movable on the magnet. If this helix is placed at the south pole of the magnet, and if an armature of soft iron is approached to this pole, there results a current, the direction of which will correspond to that of a magnetizing current, and which is caused by the increase of magnetic energy due to the presence of the armature. This current has, say, a positive value of 12, and when the armature is withdrawn, a second negative current of equal value will be obtained. It now remains to examine what occurs when the helix is moved in various directions from the poles towards the neutral line of the magnet, and *vice versâ*. The following results have been observed:—

1. When the coil is moved from the south pole to the neutral line, an inverse or magnetization current of 22 in value is obtained.

2. When this movement is reversed, another or direct current is generated, of 25 in value.

3. If, instead of bringing the coil back from the neutral line towards the south pole, the first movement is continued towards the north pole, a second current will be obtained in the reverse direction to that of the current due to the movement over the first half of the distance between the poles. If the movement is arrested when the coil has reached midway between the neutral line and the north pole, there will result a direct current of 12.

4. By bringing the coil from this last position towards the neutral line, an indirect deflection of 10 will be obtained.

The induced currents produced by the movements of the coil along the magnet behave as if the neutral line represents a resultant of all the magnetic actions in the bar. If this resultant were represented by a line in the direction of which the whole magnetic current passes, the current produced by moving the coil towards this line should, according to the law of Lenz, be inverse; and this is actually the case, since by moving the coil from either the north or the south pole towards the neutral line, the deflection is in accordance. On the other hand, the currents produced by moving the coil away from this line should, according to the same law, be direct; and this is actually observed.

In accordance with these considerations, a small coil movable around a magnetized ring should be traversed by a direct current when it moves from the neutral line in the direction of the inductor, which polarizes one of the semicircular magnets constituting this ring; and this is observed in the Gramme machine.

What would result from the passage of the coil in front of the inducing pole itself, say the south pole of the magnet? Instead of a small coil, take a thin real coil, capable of sliding upon a long rod of iron answering the purpose of a magnetic core. To judge as to the direction of the currents to be ob-

served, commence by examining the direction of the current generated when the coil is approached towards the south pole of the inducing magnet, the anterior end of which—that is to say, the end which, in the following experiments, is in front—will be presented first to the pole in question. Under these conditions an inverse current of 25 is obtained, and, by withdrawing the coil, a direct one of 22. This so far reproduces the well-known experiment of Faraday.

If the coil is caused to pass from right to left, and tangentially, in front of the south pole of the inductor, taking care to produce this movement in two stages, there is observed:—

That in the first half of the movement, a direct current is developed, 8 in value; and that, in the second half, another current is produced, of 5 in the same direction.

That, by reversing the direction of the motion, the direction of the currents is also reversed.

We may, therefore, conclude that the currents resulting from the tangential movement of a coil in front of a magnetic pole are produced under conditions altogether different from those which prevail in the case of currents resulting from the movement in the direction of the axis of the magnet. These two movements, in fact, occur not only in two directions perpendicular to each other, but also under conditions which differ in relation to the mode in which the induction takes place in the different portions of the coil. In the case of tangential motion, induction is exerted only upon one half of the circumference of the turns of wire, and it acts on each side through different ends of the coil. In the other case, the relative positions of the different portions of the helix remain under the same conditions in respect to the inductor pole, and it is only the position of the resultant which varies.

What occurs when the coil, moved as above described, is subject to the action of a magnetic core influenced by the inductor? It is only necessary to slide the bobbin upon the long iron rod whilst this is exposed to the action of the inducing pole; the following effects are observed:—

In the first place, when the iron rod is approached towards

the inducing pole, though maintained at a distance from it sufficient to allow of the movement of the coil between it and the pole, there is produced in the coil, situated on one side of the pole, an induced current resulting from the magnetization of the bar, which gives an inverse current of 39.

When the coil, placed as in the first series of experiments, is set in motion from right to left, it produces, at the moment when it arrives beneath the inducing pole, a direct current of 22; and by continuing the movement beyond the inducing pole, a fresh current, of 30, in the same direction is obtained.

The effects produced by the passage of the coil in front of the inductor are thus in the same direction, with or without an iron core, but are much more energetic with it. It may, therefore, be said that the currents generated in consequence of the displacement of the helices on a Gramme ring, relatively to the two resultants corresponding to the two neutral lines, are in the same direction as those produced by the passage in front of the inducing poles of the turns of wire in the helices in each half of the ring.

In order to study the effects resulting from polar interversions, the experiment may be arranged in the following manner:—

Take the rod of iron provided with the induction coil previously referred to, and slide a permanent magnet over one of its extremities, perpendicularly to its axis.

In this manner the rod undergoes successive interversions of polarity, and it is found, not only that by this action alone a more energetic current is produced than the magnetization and demagnetization currents which result from the action of one pole of the magnet, but, further, that this current is not instantaneous, but appears to augment in energy until the interversion of the poles is complete. The direction of this current varies according to the direction of the movement of the magnetized bar, and if we compare it to that which results from the magnetization or the demagnetization of the magnetic core under the influence of one or the other of the poles of the magnetized bar, it will be found that it is exactly in the same direction as the demagnetization current determined by the

pole which has first acted. It is consequently in the same direction as the magnetization current of the second pole; and since, in the movement performed by the magnet, the magnetic core becomes demagnetized in order to become magnetized in the contrary direction, the two currents which result from these two consecutive actions are in the same direction, and consequently form one current occurring throughout the whole movement of the magnet. On the other hand, the movement of the magnet in the opposite direction, having the effect of producing at the commencement a demagnetization in the contrary direction to that operated in the first case, the current which results from this retrogade movement must be in the direction contrary to the first.

As to the effects produced by the magnet acting upon the movable coils perpendicularly to their axes, the result must be that the different portions of the core of the coils successively constitute a series of magnets with interverted poles, which will occasion those currents in the same direction already observed, and these currents will change in direction according as the coils travel from right to left, or from left to right.

Repeating the experiments described at the commencement of this section, with a rod of iron converted into a magnet by the influence of two opposite magnetic poles applied to its two extremities, different effects are to be observed. For this purpose take an electro-magnet, with very long arms, one of which, being deprived of its magnetizing helix, can receive the small travelling coil. When a powerful current is passed through this electro-magnet, whilst an armature is applied to its poles, the naked arm becomes a magnet, of which the poles are excited at one end by the base-plate, and at the other by the armature. Consequently, by moving the coil from one to the other end of this naked arm, it might be expected to obtain the same effects as with the persistent magnet. This is not the case, and the following are the results obtained:—

At the moment when the electro-magnet is excited, a magnetization current is produced in the system, and, the coil

being placed against the base-plate, this current produces an inverse current of 90.

By moving the coil towards the middle of the bar, there is a direct current of 5; and by continuing the movement in the direction of the armature, the direct current is again 5.

By reversing the movement, an indirect current of 5 is obtained when the coil is moved from the armature to the middle of the rod, and one of 4 by the motion from the middle of the rod to the base-plate of the electro-magnet.

It appears to result from these experiments that the iron rod, instead of being polarized in inverse direction at the two ends, behaves as though it had only the polarity of the base-plate; and as the only difference between the two modes of communicating polarity is merely that, on the one hand, the rod was screwed to the base-plate, whilst on the other it was only in simple contact with the armature, it might be concluded that the contact of two magnetic bodies does not establish between them a magnetic conductivity sufficient for such contact to be equivalent to one produced by a strong pressure. The same thing is observed in the case of electrical conductivity when two portions of metal are in contact; the conductivity is perfect only when a strong pressure is applied.

By fastening the armature to the poles of the electro-magnet by means of screws, the effects take place as though the rod constituted a true magnet.

Upon those various principles, all the effects produced in the Gramme, Siemens, and Meritens machines may readily be explained.

MULTIPLE-CIRCUIT MACHINES.

The machines described in the preceding section, although in some instances applicable as multiple-circuit machines, are not especially designed to work more than one exterior electrical circuit. This does not include that the preceding machines are capable of maintaining only one light centre; on the contrary, some of these single circuit-machines will maintain as many lights upon a single circuit, as the machines to be described will in the total of their multiple circuits.

These multiple-circuit machines have, however, been designed with a special purpose, that the whole system of lighting should not depend for its existence upon the continuity of one circuit. This is doubtless a great advantage, but at the same time there is necessitated a greater expenditure of motive power to produce the same light power; the merits of each system, however, need very carefully weighing, and in the present state of electrical lighting the balance of judgment is scarcely sufficiently delicate to determine which is superior.

LONTIN'S MACHINES.

M. Lontin has made some important improvements in dynamo-electric machines. In 1875 he introduced into England a plan for turning the whole of the electricity produced in the revolving armature of a machine, into the exciting electro-magnets, instead of only a portion. This of course rendered the exciting magnets very powerful in a short time, and the magnetic resistance to the rotation of the coil increases in a few moments to such an extent, that it is almost impossible to overcome it. The circuit was then broken by an automatic commutator, and the special working circuit inserted. One great objection to this form of machine was the heat generated in the coils. In 1876 Lontin introduced a machine to overcome this objection. He constructs the armature in the form of a wheel provided with a central boss and spokes of soft iron, mounted on a shaft to which rotary motion can be imparted (Fig. 77). Each soft-iron spoke of the wheel has a coil of wire wound on it, and is, in fact, an electro-magnet, which becomes a source of induced electricity when the wheel is revolved between the poles of a fixed electro-magnet. The residual magnetism of the cores of the electro-magnets is sufficient at first to generate a feeble current in the coils when the wheel is revolved; and a portion of this current, kept in one direction by a commutator, is diverted in the usual manner into the fixed electro-magnets to intensify them. One or several of these induction wheels may be applied on the same shaft, placing them opposite

one or more series of permanent or electro-magnets. When two wheels are fixed on the same shaft, one of them can supply currents exclusively for feeding the electro-magnets, and the currents from the other can be used for external work. If the currents are required to be of only one direction, a commutator or collector is used, and one for each coil or pair of coils is placed on the shaft, to each being attached

Fig. 77.

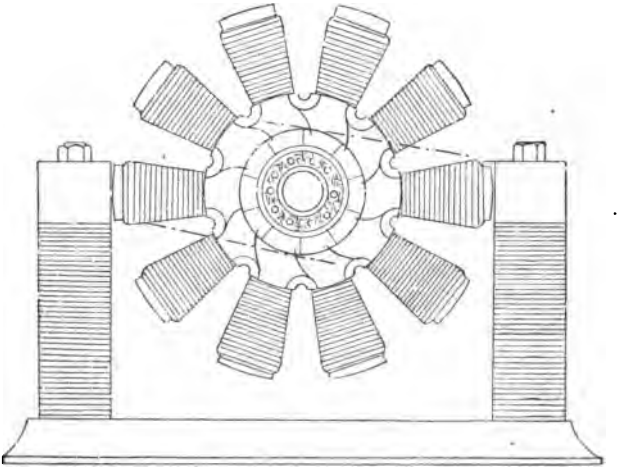

the two ends of the wire of the corresponding coil or pair of coils. When merely collectors are used, all the coils on the wheel are connected up in series, so as to form a completely closed circuit, as shown in Fig. 77. All the coils approaching a pole of the electro-magnet are inversely electrified to those receding from the same pole. A metal strip is placed opposite the pole of the electro-magnet, to collect by contact the electricity generated in the coil at the instant that its polarity becomes reversed; a similar rubber is also applied opposite the other pole of the electro-magnet. To avoid oxidizing effect under the action of sparks, the commutators are enclosed in a bath of non-drying oil.

The most valuable of Lontin's improvements is the plan of constructing dynamo-electric machines in such a manner

that the inducing electro-magnets have a rotary motion, whilst the induced coils are stationary. Figs 78 and 79 represent this machine. The coils of the induction wheel are in this case the inducers, and are transformed into electro-magnets by the current of a spare magneto-electric machine

FIG. 78.

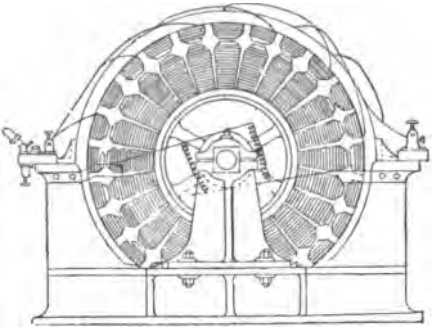

FIG. 79.

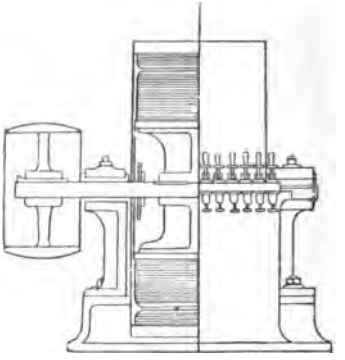

passed through them. On rotation of the wheel, they induce in the surrounding coils a series of currents, which can be utilized without employing any collector or contact-ring. In a machine having 50 induced coils, there would be 50 sources of electricity that could be used either separately or combined.

The fixed electro-magnet illustrated in the previous figure may have its cores prolonged, so that more than one coil of insulated wire can be placed upon them. Thus, when the wheel in this machine is turned into an inducer, by reason of the currents already induced in it by the electro-magnets, it will in its turn induce currents in the additional coils, and these currents can be utilized for electric lighting.

The machine illustrated in Figs. 78 and 79 is used as a "generator," to supply currents to the "dividing" machine (Figs. 80 and 81).

This second or dividing machine consists of a revolving drum, carrying a series of radial magnets. The coils of these radial magnets are connected together, so that one magnet has its positive pole at the outside end, and the succeeding

magnet its positive pole at the inside end. The radial magnets are thus made to alternate their poles considered as a cir-

FIG. 80.

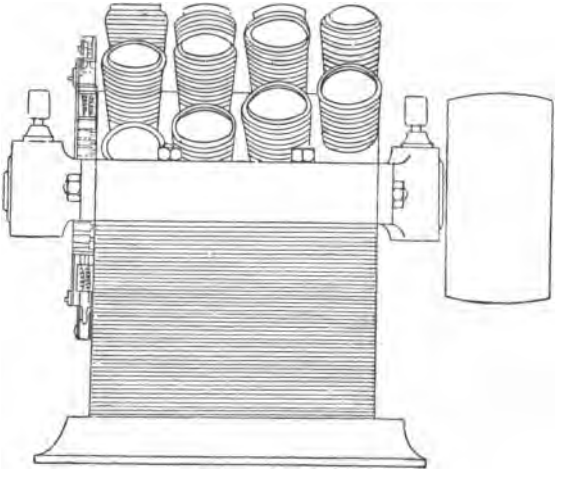

FIG. 81.

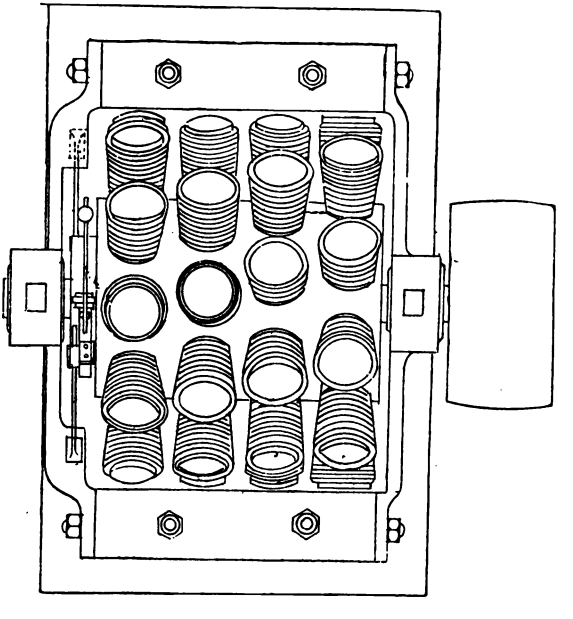

cumference to the wheel. This arrangement admits of the revolving wheel inducing a number of alternate currents, equal to half the number of spokes. By an exterior commutator, which may be connected up in many different ways, these currents can be combined as required.

This duplex Lontin system supplies a total illuminating power of 12,000 candles. The generating machine is driven at 250 revolutions, and the distributing or dividing machine at about 400, per minute. With an engine of 8 horse-power nominal, 12 light-circuits can be easily maintained.

THE GRAMME "DISTRIBUTOR."

This machine (Figs. 82 and 83) consists of a ring of iron wound with coils of insulated copper wire, alternately right

FIG. 82.

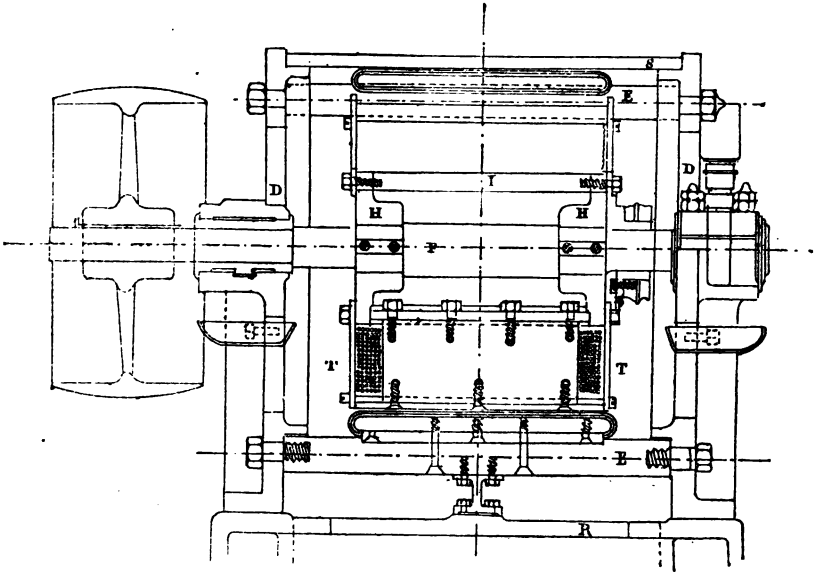

and left handed, the wire being coiled in one direction, so as to cover one-eighth part of the ring, then in the opposite direction for the next eighth part, each of the eight sections of the ring being wound in the reverse direction to the winding of the two adjacent sections. This ring may be regarded

as eight curved electro-magnets placed end to end, with their similar poles in contact, so as to form a circle; it is rigidly fixed in a vertical position to the solid framing of the apparatus, the inducing electro-magnets revolving within it.

The electro-magnets, of which there are eight, are fixed radially to a central box revolving upon a horizontal shaft,

FIG. 83.

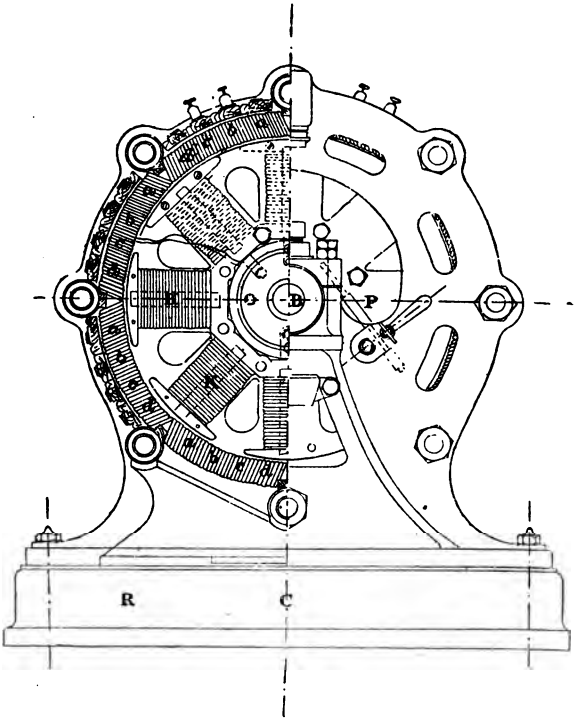

upon which is a pulley, driven by a band from a motor. These radial, flat electro-magnets are wound alternately right and left handed, and their alternate ends are consequently of opposite polarity. The cores of these magnets are extended by plates, to increase the area of the magnetic field by which currents are induced in the coils of the ring.

In this machine there is no self-contained apparatus for producing the current by which the electro-magnets are

magnetized, but a small and separate Gramme machine of the continuous-current type is employed, and is driven by a separate strap. The current from this machine is caused to circulate in the coils of the rotating radial electro-magnets, by which these are magnetized to saturation.

Each section of the ring is built up of four sub-sections, *a b c d* (Fig. 83), and all these sub-sections of any one section are wound in the same direction. This subdivision admits of the connecting up of the sub-sections into 32, 16, 8, or 4 circuits. All the sub-sections marked *a* are influenced by the rotating magnets in precisely similar manner, because the influence of a north pole upon a coil wound in a right-handed direction is the same as that of a south pole upon a coil wound in a left-handed direction. Similarly, the currents in all the *b* coils are of one direction, whatever may be the position of the rotating magnets. Thus, all the coils similarly marked can be connected into one circuit, and terminal screws are provided for the required arrangement. The current from the small machine is led to the rotating magnets through the flat brushes of silvered copper wire attached to the framework of the machine, and in rubbing contact with two insulated copper cylinders, one connected to each end of the magnet circuit.

The largest size of this machine supplies 16 Jablochkoff candles, each of 1000 candle-power, at a speed of 600 revolutions per minute, absorbing 16 h.-p.

The cost of working these machines will be found detailed under the proper section. Both for this and the Lontin multiple-circuit systems, the diagram (Fig. 25, p. 47) will illustrate the method of the connections.

CHAPTER VI.

MECHANICAL EFFICIENCY OF ELECTRIC-LIGHT MACHINES.

THERE can be nothing done in the intercomparison of any natural force until accurate measurements have been made. For those measurements the electric-light engineer has mainly to look to the labours of the Committee on dynamo-electric machines formed by the Franklin Institute, and to Professors Houston and Thomson's report* as to the ratio of efficiency in the conversion of motive power into electricity.

In entering this comparatively new field of research, peculiar difficulties occurred, owing to conditions that do not exist in the various forms of batteries used as sources of electrical power. In many battery circuits a high external resistance may be employed, and the electro-motive force remains comparatively constant, while in dynamo-electric machines, in which the reaction principle is employed, the introduction of a very high external resistance into the circuit must be necessarily attended by decided variations in the electro-motive force, due to changes in the intensity of the magnetic field in which the currents have their origin. Moreover, a considerable difficulty is experienced in the great variations in the behaviour of these machines when the resistance of the arc, or that of the external work, is changed. Changes, due to loss of conductivity by heating, also take place in the machine itself.

* This report has been transcribed in these pages with only very slight alterations. The language and statements of the report have been so carefully considered, and have so much weight of authority, as to render a paraphrase unadvisable.

These variations are also attended by changes in the power required to drive the machine, and in the speed of running, which again react on the current generated.

There are certain normal conditions in the running of dynamo-electric machines designed for light, under which all measurements must be made, viz.:

1. The circuit must be closed, since, on opening, all electrical manifestations cease.

2. The circuit must be closed through an external resistance equal to that of the arc of the machine.

3. The arc taken as the standard must be the normal arc of the machine. This condition can only be fulfilled by noticing the behaviour of the machine while running, as to the absence of sparks at the commutator, the heating of the machine, the regularity of action in the consumption of carbons in the lamp, etc.

4. The speed of the machine must be, as nearly as possible, constant.

5. The power required to maintain a given rate of speed must be, as nearly as possible, constant.

The machines submitted to the Committee for determinations were as follows, viz.:

1. Two machines of different size, and of somewhat different detailed construction, built according to the invention of Mr. C. F. Brush, and styled respectively in the report as A^1, the larger of the two machines, and A^2, the smaller.

2. Two machines known as the Wallace-Farmer machines, differing in size, and in minor details of construction, and designated respectively as B^1, the larger of the two, and B^2, the smaller. In the case of the machine B^1, the experiments were discontinued after the measurement of the resistances was made, insufficient power being at disposal to maintain the machine at its proper rate of speed.

3. A Gramme machine of the ordinary construction.

All the above machines are constructed so that the whole current traverses the coils of the field magnets, being single-current machines, in which the reaction principle is employed. In the case of the machine designated A^2, the commutators

are so arranged as to permit the use of two separate circuits when desired.

For the purpose of preserving a ready measure of the current produced by each machine, under normal conditions, a shunt was constructed by which an inconsiderable but definite proportion of the current was caused to traverse the coils of a galvanometer, thus giving with each machine a convenient deflection, which could at any time be reproduced. As the interposition of this shunt in the circuit did not appreciably increase its resistance, the normal conditions of running were preserved.

As indicating the preservation of normal conditions in any case, the speed of running and the resistances being the same as in any previous run, it was found that when there was an equal expenditure of power, as indicated by the dynamometer, the current produced, as indicated by the galvanometer, was in each case the same.

Certain of the machines experimented with heated considerably on a prolonged run; most of the tests, therefore, were made when the machines were as nearly as possible at about the temperature of the surrounding air. It is evident that no other standard could be well adopted, as under a prolonged run the temperature of the different parts of the machine would increase very unequally; and, moreover, it would be impossible to make any reliable measurements of the temperatures of many such parts.

In measuring the resistance of the machines, a Wheatstone's bridge, with a sliding contact, was used in connection with a delicate galvanometer and a suitable voltaic battery. In taking the resistances of the machines, several measurements were made with the armatures in different positions, and the mean of these measurements taken as the true resistance.

It was, of course, a matter of the greatest importance to obtain a value for the resistance of the arc in any case, since upon the relative values of this resistance, and that of the machine, the efficiency would in any given case, to a great extent, depend. In each case, the arc of which the resistance

was to be taken, was that which was obtained when each machine was giving its average results as to steadiness of light and constancy of the galvanometer deflection.

The method adopted for the measurement of the arc was that of substitution, in which a resistance of German silver wire, immersed in water, was substituted for the arc, without altering any of the conditions of running. This substituted resistance was afterwards measured in the usual way, and gave, of course, the resistance of the arc. It could, therefore, when so desired, serve as a substitute for the arc. No other method of obtaining the arc resistance appeared applicable, since the constancy of the resistance of the arc required the passage of the entire current through the carbons.

It may be mentioned, as an interesting fact in this connection, that when the current flowing was great, the arc corresponding thereto had a much lower resistance than when the current was small. This fact is, of course, due to increased vaporization, consequent on increased temperature in the arc.

In determining the true arc resistance, the resistance of the electric lamp controlling the arc was measured separately, and deducted from the result obtained with the German silver wire substitute.

For ease of obtaining a resistance of German silver wire equal in any case to that of the arc, a simple rheostat was constructed, by winding, upon an open frame, such a length of wire as was judged to be in excess of the resistances of any of the arcs to be measured. By means of a sliding contact, successive lengths of the wire were added until the conditions were reproduced. With this arrangement, no difficulty was experienced in reproducing the same conditions of normal running as when the arc was used. The same conducting wires were used throughout these experiments. Being of heavy copper, their resistance was low, viz. about ·016 ohm.

To determine the value of the current, two methods were selected, one based on the production of heat in a circuit of known resistance, and the other upon the comparison of a definite proportion of the current with that of a Daniell's battery.

In the application of the first method, eight litres of water, at a known temperature, were taken, and placed in a suitable non-conducting vessel. In this was immersed the German silver wire, and the sliding contact adjusted to afford a resistance equal to that of the normal arc of the machine under consideration. This was now introduced into the circuit of the machine. All these arrangements having been made, the temperature of the water was accurately obtained, by a delicate thermometer. The current from the machine running under normal conditions was allowed to pass, for a definite time, through the calorimeter so provided. From the data thus obtained, after making the necessary corrections as to the weight of the water employed, the total heating effect in the arc and lamp, as given in Table II., was deduced.

Since the heat in various portions of an electrical circuit is directly proportional to the resistance of those portions, the total heat of the circuit was easily calculated, and is given in Table III., in English heat units. For ease of reference, the constant has been given for conversion of these units into the now commonly accepted units of heat.

Having thus obtained the heating effect, the electrical current is—

$$C = \sqrt{\frac{W h \times 772}{R t c}},$$

where C = the weber current per ohm, W the weight of water in pounds, h the increase of temperature in degrees Fahr., 772 Joule's constant, R the resistance in ohms, t the time in seconds, and c the constant, ·737335, the equivalent in foot-pounds of one weber per ohm per second. The currents so deduced for the different machines are given in Table IV.

The other method employed for obtaining the current, viz., the comparison of a definite portion thereof with the current from a Daniell's battery, was as follows:—A shunt was constructed, of which one division of the circuit was ·12 ohm, and the other 3000 ohms. In this latter division of the circuit was placed a low-resistance galvanometer, on which convenient deflections were obtained. This shunt being placed in the circuit of the machine, the galvanometer deflections were

carefully noted. To the resistance afforded by the shunt, such additional resistance was added, as to make the whole equal to that of the normal arc of the machine. These substituted resistances were immersed in water, in order to maintain an equable temperature.

Three Daniell's cells were carefully set up and put in circuit with the same galvanometer, and with a set of standard resistance coils. Resistances were unplugged sufficient to produce the same deflections as those noted with the shunt above mentioned. The shunt ratio, as nearly as could conveniently be obtained, was $\frac{1}{25000}$. Then the formula

$$C = \frac{s\,n \times 1{\cdot}079}{R},$$

where C equals the weber current, s the reciprocal of the shunt ratio, n the number of cells employed, 1·079 the assumed normal value of the electro-motive force of a Daniell's cell, and R the resistances in the circuit with the battery, gives at once the current. In comparison with the total resistances of the circuit, the internal resistance of the battery was so small as to be neglected.

The results obtained were as follows:

Name of Machine.	Shunt ratio.	Number of Daniell's cells.	Resistances unplugged.	Speed of Machine.
Large Brush	$\frac{1}{25000}$	3	2710 ohms.	1340 rev.
Small Brush	,,	,,	3700 ,,	1400 ,,
Wallace-Farmer	,,	,,	8320 ,,	844 ,,
	,,	,,	6980 ,,	1040 ,,
Gramme	,,	,,	4800 ,,	800 ,,

The weber currents, as calculated from the above data, are given in Table IV.

From the results thus derived, the electro-motive force was deduced by the general formula—

$$E = C \times R.$$

The electro-motive force thus calculated will be found in Table IV.

TABLE I.

SHOWING WEIGHT, POWER ABSORBED, LIGHT PRODUCED, ETC., BY DYNAMO-ELECTRIC MACHINES TESTED BY A COMMITTEE OF THE FRANKLIN INSTITUTE, 1877–78.

Name of Machine.	Weight in pounds.	Copper Wire in				Revolutions of Armature per minute.	Foot-pounds of power consumed.	Horse-power.	Light produced in Standard Candles.		Foot-pounds of power consumed per candle light.	Size of carbons.	Length of Carbon consumed per hour.	
		Armature.		Field Magnets.										
		Size.	Weight.	Size.	Weight.				Total.	Per h.-p.			+	−
		in.	lbs.	in.	lbs.									
Large Brush	475	·081	32	·134	100	1340	107·606	3·26	1230	377	87·4	$\frac{3}{8}\times\frac{3}{8}$	1·78	·34
Small „	390	·063	24	·096	80	1400	124·248	3·76	900	239	137·	$\frac{3}{8}\times\frac{3}{8}$	1·91	·58
Large Wallace	600	·042	50	·114	125	800			823					
Small	350	·043	$18\frac{3}{4}$	·098	41	1000	128·544	3·89	440	113	292·	$\frac{1}{4}\times\frac{1}{4}$	2·45	·073
Gramme	366	·059	104	·108	104	800	60·992	1·84	705	383	85·	$\frac{1}{4}\times\frac{1}{4}$	3·15	·55

Statements are frequently made, when speaking of certain dynamo-electric machines, that they are equal to a given number of Daniell's, or other well-known, battery cells. It is evident, however, that no such comparison can properly be made, since the electro-motive force of a dynamo-electric machine, in which the reaction principle is employed, changes considerably with any change in the relative resistances of the circuit of which it forms a part, while that of any good form of battery, disregarding polarization, remains approximately constant. The internal resistance of dynamo-electric machines is, as a rule, very much lower than that of any ordinary series of battery cells, as generally constructed, and, therefore, to obtain with a battery conditions equivalent to those in a dynamo-electric machine, a sufficient number of cells in series would have to be employed to give the same electro-motive force; while, at the same time, the size of the cells, or their number in multiple arc, would require to be such that the internal resistance should equal that of the machine.

Suppose, for example, that it be desired to replace the large Brush machine by a battery whose electro-motive force and internal and external resistances are all equal to that of the machine, and that we adopt as a standard a Daniell's cell, of an internal resistance of, say, one ohm. Referring to Table IV., the electro-motive force of this machine is about 39 volts, to produce which about 37 cells, in series, would be required; but, by Table II., the internal resistance of this machine is about ·49 ohm. To reduce the resistance of our standard cell to this figure, when 37 cells are employed in series, 76 cells, in multiple arc, would be required. Therefore, the total number of cells necessary to replace this machine would equal 37 × 76, or 2812 cells, working over the same external resistance. It must be borne in mind, however, that although the machine is equal to 2812 of the cells taken, that no other arrangement of these cells than that mentioned, viz. 76 in multiple arc and 37 in series, could reproduce the same conditions, and, moreover, the external resistances must be the same. The same principles, applied to other machines, would, when the internal resistance was great, require a large

number of cells, but arranged in such a way as to be extremely wasteful, from by far the greater portion of the work being done in overcoming the resistance of the battery itself.

The true comparative measure of the efficiency of dynamo-electric machines as means for converting motive power into work derived from electrical currents, whether as light, heat, or chemical decomposition, is found by comparing the units of work consumed with the equivalent units of work appearing in the circuit external to the machine. In Table V. the comparative data are given. In the first column the dynamometer reading gives the total power consumed; from which are to be deducted the figures given in the second column, being the work expended in friction, and in overcoming the resistance of the air; although, of course, it must be borne in mind that that machine is the most economical in which, other things being equal, the resistance of the air and the friction are the least. The third column gives the total power expended in producing electrical effects, a portion only of which, however, appears in the effective circuit, the remainder being variously consumed in the production of local circuits in the different masses of metal composing the machines. This work eventually appears as heat in the machine. Columns four, five, and six give respectively the relative amounts of power variously appearing as heat in the arc, in the entire circuit, and as heat due to local circuits in the conducting masses of metal in the machine, irrespective of the wire. This latter consumption of force may be conveniently described as due to the *local action* of the machine, and is manifestly comparable to the well-known local action of the voltaic battery, since in each case it not only acts to diminish the effective current produced, but also adds to the cost.

No determinations made with an unknown or abnormal external resistance can be of any value, since the proportion of work done, in the several portions of an electrical circuit, depends upon, and varies with, the resistances they offer to its passage. If, therefore, in separate determinations with any particular machine, the resistance of that part of a circuit

TABLE II.

Resistances of Dynamo-Electric Machines.

From Determinations by Professors Houston and Thomson.

Name of Machine.	Temperature in degrees F.	Resistances.		Resistance of Conducting wire.	Resistance of Lamp, exclusive of Arc.	Corrected Resistances.		Total resistance of the Circuit. Ohms.	Remarks.
		Of Machine + Conductor.	Of Arc + Lamp.			Of Machine − Conductor.	Of Arc − Lamp.		
A^1, Large Brush	73½	·485	·57	·016	·032	·483	·54	1·055	At beginning of run.
A^1 „ „	88	·495	·82	·016	·032	·493	·79	1·315	After running 25 min.
A^2, Small Brush	74	1·255	1·70	·016	·032	1·239	1·67	2·955	Arranged for low resist.
A^2 „ „	74	5·06		·016		5·044			„ „ high „
B^1, Large Wallace...	74	4·60	1·98	·016	·032	4·584	1·95	6·58	Machine cold.
B^1 „ „	118	5·13							After 40 min. run.
B^2, Small Wallace	74	4·96	2·87	·016	·1025	4·944	2·77	7·83	At 844 rev.
B^2 „ „	74	4·96	3·24	·016	·1025	4·944	3·18	8·24	„ 1000 rev.
Gramme	68	1·685	1·35	·016	·1025	1·669	1·25	3·04	Arc not normal.
„	68	1·685	1·97	·016	·1025	1·669	1·87	3·66	Arc normal.

of which the work is measured be in one instance large in proportion to the remainder of the circuit, and in another small, the two measurements thus made would give widely different results, since in the case where a large resistance was interposed in this part of the circuit, the percentage of the total work appearing there would be greater than if the small resistance had been used.

When an attempt has been made to determine the efficiency of a single machine, or of the relative efficiency of a number of machines, by noting the quantity of gas evolved in a voltameter, or by the electrolysis of copper sulphate in a decomposing cell, when the resistance of the voltameter or decomposing cell did not represent the normal working resistance, it is manifest that the results cannot properly be taken as a measure of the actual efficiency.

In Table II. it will be found that, in general, where the machine used had a high internal resistance, the arc resistance normal to it was also high, but they are not necessarily dependent upon each other. The arc resistance depends on the intensity of the current, the nature of the carbons, and on their distance apart. Other conditions being the same, the resistance of the arc is less when the current is great.

Since all the machines examined were built for lighting, it will readily be seen that, other things being equal, that machine is the most economical in which the work done in the arc bears a considerable proportion to that done in the whole circuit, and since, with any given current, the work is proportional to the resistance, we have in Table II. the data for comparison in this regard. For example, in the second determination of A^1, the large Brush machine, the resistance of the arc constitutes considerably more than one-half the total resistance of the entire circuit, while in B^2, the small Wallace-Farmer machine, it constitutes somewhat more than one-third the total resistance. These relative resistances give, of course, only the proportion of the current generated, which is utilized in the arc as light and heat, the conditions of power consumed to produce the current not being there expressed.

TABLE III.

Thermic Effects of Dynamo-electric Machines.

From Determinations by Professors Houston and Thomson.

Name of Machine.	Galvanometer deflection with shunt.	Heating Effect in Arc and Lamp.			Resistance of Calorimeter equal to arc.	Heat in arc and lamp, in pounds. H_2O, 1° F.	Total heat of the circuit, in pounds. H_2O, 1° F.	Heat per ohm per second.	Speed of machine rev. per min.	Dynamometer reading, including friction.
		Pounds H_2O.	Increase degrees Fahr.	Duration of run.						
A^1, Large Brush	51½°	18·64	23·25	10	·82	43·338	69·49	·881	1340	107606
A^2, Small Brush	34	18·63	9·09	5	1·70	33·87	58·87	·332	1200	117700
A^3 „ „	37	18·63	18·66	8	1·70	43·45	75·57	·426	1400	124248
B^2, Small Wallace	25½	18·63	11·50	12	2·87	17·85	48·70	·104	844	97068
B^2 „ „	55½	18·63	4·92	6	2·87	15·28	41·69	·089	844	97068
B^2 „ „	24½	18·64	10·75	10	3·28	20·04	50·34	·102	1040	128544
Gramme	38	18·64	16·25	10	1·97	30·29	56·28	·256	800	60992

For conversion to metrical heat units—1lb. water, 1° F., = 259·185 grammes of water, 1° C.

During any continued run, the heating of the wire of the machine, either directly by the current, or indirectly from conduction from those parts of the machine heated by local action, as explained in a former part of this report, produces an increased resistance, and a consequent falling off in the effective current. Thus, in Table II., at the temperature of 73·5° Fahr., A^1, the large Brush machine, had a resistance of ·485 ohm, while at 88° Fahr., at the armature coils, it was ·495 ohm. These differences were still more marked in the case of B^1.

In A^2, the small Brush machine, it will be noticed that two separate values are given for the resistance of the machine. These correspond to different connections, viz. the resistance, 1·239 ohms, being the connection at the commutator for low resistance, the double conducting wires being coupled in multiple arc, while 5·044 ohms represent the resistance when the sections of the double conductor are coupled at the commutator in series.

Referring to Table III., the numbers given in the column headed "Heat in arc and lamp," are the measure of the total heating power in that portion of the circuit external to the machine. They do not, however, in the case of any machine, represent the energy which is available for the production of light, which depends also on the nature and the amount of the resistance over which it is expended. For example, the heat in arc and lamp are practically the same in each of the Brush machines, if the measurement of the smaller of these machines be taken at the higher speed. The amount of light produced, however, is not the same in these two instances, being considerably greater in the case of the larger machine. The explanation of this apparent anomaly is undoubtedly to be found in the different resistances of the arcs in the two cases. In the large Brush machine the carbons are nearer together than when the small machine is used. This suggests the very plausible explanation, that the cause of the difference is to be attributed to the fact that although the total heating effect is equal in each case, when the large machine is used, the heat produced is evolved in a smaller

TABLE IV.

Current and Electro-motive Force of Dynamo-electric Machines.

From Determinations by Professors Houston and Thomson.

Name of Machine.	Weber Current per Ohm per second.		Electro-motive Force in Volts.		Per cent. of the work of current appearing in the arc.	Corresponding Dynamometric Values.	Remarks.
	From heat developed.	By comparison with Daniell's batt.	Calc. from heat and resistance.	By comparison with Daniell's batt.			
A^1, Large Brush	30·37	29·87	39·94	39·28	60·08	107606	Speed 1340 rev.
A^2, Small Brush	18·63		55·05			117700	„ 1200 „
A^2 „ „	21·12	21·87	62·41	64·63	56·51	124248	„ 1400 „
B^2, Small Wallace	10·42	9·73	81·59	76·19	35·38	97068	„ 844 „
B^2 „ „	9·64		75·48				„ 844 „
B^2 „ „	10·33	11·16	85·12	91·96	38·59	128544	„ 1040 „
Gramme	16·38	16·86	59·95	61·71	51·09	60992	„ 800 „

space, and its temperature, and consequent light-giving power, thereby largely increased.

It would seem, indeed, that any future improvements made in the direction of obtaining an increased intensity of light from a given current, will be by concentrating the resistance normal to the arc in the most limited space practicable, thereby increasing the intensity of the heat, and, consequently, its attendant light.

It may be noted in this connection, that in all the cases in which the resistance of the arc was low, the photometric intensity was high. This, indeed, might naturally be expected, since a great intensity of heat would, under existing conditions of the use of the arc, admit of increased vaporization, and consequent lowering of the resistance.

In the column headed "Total heat of circuit" are given the quantities of heat developed in the whole circuit, which numbers, compared with those in the preceding column, furnish us with the relative proportions of the work of the circuit, which appear in the arc and lamp.

The column headed "Heat per ohm per second," gives the relative work per ohm of resistance in each case, and these numbers, multiplied by the total resistance, give the total energy of the current expressed in heat units per second.

In Table IV. are given the results of calculation and measurement, as to the electrical work of each machine. It is evident, to those acquainted with the principles of electrical science, that in the weber current and the electro-motive force, we have the data for comparing the work of these machines with that of any other machine or battery, whether used for light, heat, electrolysis, or any other form of electrical work.

As might be supposed, the values given in Table IV., of the weber current, approximate relatively to the photometric values, as will be seen from an examination of that part of the general report of the committee relating to photometric measurements.

The values of the weber current, as deduced from the heat developed, and from the comparison with a Daniell's cell,

do not exactly agree; nor could this have been expected, when the difficulty of minutely reproducing the conditions as to speed, resistance, etc., is considered.

By comparison of the electro-motive force of the different machines, it appears that no definite unit seems to have been aimed at by all the makers as that best adapted to the production of light.

Table V. is designed especially to permit a legitimate comparison of the relative efficiency of the machines, as well as their actual efficiency in converting motive power into current. The actual dynamometer reading is given in the first column. On account of differences of construction and differences in speed of running, the friction and resistance of the air vary greatly, being least with the Gramme, as might be expected, since the form of the revolving armature and the speed of the machine conduce to this result. This is, of course, a point greatly in favour of the Gramme machine.

That portion of the power expended available for producing current is given in the third column, being the remainder, after deducting the friction, as above mentioned; but this power is not in any case fully utilized in the normal circuit. This is found to be the case by comparing calculations of the total work of the circuit in foot-pounds, as given in the appropriate column, with the amount expended in producing such current.

For instance, in the case of A^1, the large Brush machine, the available force for producing current is 89656 foot-pounds per minute, of which only 53646 reappear as heat in the circuit. The balance is most probably expended in the production of local currents in the various conducting masses of metal composing the machine. The amount thus expended in local action is given in the column designated "F. P. unaccounted for in the circuit." A comparison of the figures in this column is decidedly in favour of the Gramme machine, it requiring the smallest proportion of power expended, to be lost in local action. When, however, we consider that the current produced by the large Brush machine is nearly double that produced by the Gramme, the disproportion in the local

TABLE V.

Effects of Dynamo-electric Machines in Foot-pounds per Minute.

From Determinations by Professors Houston and Thomson.

Name of Machine.	Dynamometer reading. F. P. consumed.	Friction and resistance of air.	F. P. consumed, after deducting friction.	F. P. appearing in arc as heat.	F. P. appearing in whole circuit.	F. P. unaccounted for in the circuit.	Per cent. of power utilized in arc.	Per cent of effect after deducting friction.
A^1, Large Brush	107606	17950	89656	33457	53646	36010	31	37½
A^2, Small Brush	117700	12328	105372	26148	45448	59924	22	25
A^2 ,, ,, ...	124248	14976	109272	33543	58340	50932	27	31
B^2, Small Wallace ...	97068	7800	89268	13780	37596	51672	14	15½
B^2 ,, ,, ...	128544	11072	117472	15469	38862	78610	12	13
Gramme	60992	4512	56480	23384	43448	13032	38	41

For conversion into Gramme-metres—1 foot-pound = 138 Gramme-metres, nearly.

action is not so great. The columns containing the percentages of "Power utilized in the arc," and "Useful effect after deducting friction," need no special comment.

The determinations made enabled the following opinions to be formed as to the comparative merits of the machines submitted for examination:—

The Gramme machine is the most economical, considered as a means for converting motive power into electrical current, giving in the arc a useful result equal to 38 per cent., or to 41 per cent. after deducting friction and the resistance of the air. In this machine the loss of power in friction and local action is the least, the speed being comparatively low. If the resistance of the arc is kept normal, very little heating of the machine results, and there is an almost entire absence of sparks at the commutator.

The large Brush machine comes next in order of efficiency, giving in the arc a useful effect equal to 31 per cent. of the total power used, or 37½ per cent. after deducting friction. This machine is, indeed, but little inferior in this respect to the Gramme, having, however, the disadvantages of high speed, and a greater proportionate loss of power in friction, etc. This loss is nearly compensated by the advantage this machine possesses over the others of working with a high external, compared with the internal, resistance, this also ensuring comparative absence of heating in the machine. This machine gave the most powerful current, and consequently the greatest light.

The small Brush machine stands third in efficiency, giving in the arc a useful result equal to 27 per cent., or 31 per cent. after deducting friction. Although somewhat inferior to the Gramme, it is, nevertheless, a machine admirably adapted to the production of intense currents, and has the advantage of being made to furnish currents of widely varying electromotive force. By suitably connecting the machine, as before described, the electro-motive force may be increased to over 120 volts. It possesses, moreover, the advantage of division of the conductor into two circuits, a feature which, however, is also possessed by some forms of other machines. The

simplicity and ease of repair of the commutator are also advantages. Again, this machine does not heat greatly.

The Wallace-Farmer machine does not return to the effective circuit as large a proportion of power as the other machines, although it uses, in electrical work, a large amount of power in a small space. The cause of its small economy is the expenditure of a large proportion of the power in the production of local action. By remedying this defect, a very admirable machine would be produced. After careful consideration of all the facts, the Committee unanimously concluded that the small Brush machine, though somewhat less economical than the Gramme machine, or the large Brush machine, for the general production of light and of electrical currents, was, of the various machines experimented with, the best adapted for the purposes of the Institute, chiefly for the following reasons:—It is adapted to the production of currents of widely varying electro-motive force, and produces a good light. From the mechanical details of its construction, especially at the commutators, it possesses great ease of repair to the parts subject to wear.

In order to make the measurements as accurate as possible, it was found necessary so to arrange the photometric apparatus that no reflected or diffused light should fall on the photometer, and thus introduce an element of error. The electric lamp was inclosed in a box, open at the back for convenience of access, but closed with a non-reflecting and opaque screen during the experiments. Projecting from a hole in the front of the box was a wooden tube, six inches square inside and eight feet long, with its inner surface blackened to prevent reflection, thus allowing only a small beam of direct light to leave the box. This beam of light passed into a similar wooden tube, placed at a proper distance from the first, and holding in its farther end the standard candle. This tube also held the dark box of a Bunsen photometer, mounted on a slide, so as to be easily adjusted at the proper distance between the two sources of light. A slit in the side of the tube enabled the observer to see the diaphragm. The outer end of the second tube was also covered with a non-

reflecting hood, and the room was, of course, darkened when photometric measurements were taken. The rigid exclusion of all reflected or diffused light is the only trustworthy method of obtaining true results, and will, no doubt, account in a large measure for the lower candle-power obtained by these experiments than that obtained by many previous experimenters.

The difficulties encountered in the measurement of the light arising from the difference in colour, were at first thought to be considerable, but further practice and experience enabled the observer to overcome them to such an extent that the error arising from this cause is inconsiderable, being greatly less than that due to the fluctuations of the electric arc.

In determining the amount of light produced by each machine, it was run continuously for from four to five hours, and observations made at intervals, care being taken to maintain the speed and other conditions normal. One of the most important conditions necessary to ensure correct results was the relative position of the carbon points. Great care was taken that the axes of the two sticks or pencils of carbon were in the same line, so that the light produced should be projected equally in all directions. Were the axes of the carbon pencils not in the same line, a much greater quantity of light would be projected in one direction, and the result of calculation of the light produced, based on the inverse square of the distance from the photometer, would be too great or too small, accordingly as this adjustment was in the one or the other direction.

Experiments were made to determine what effect on the amount of light was produced by so adjusting the carbons that the front edge of the upper one was in line with the centre of the lower one. Fig. 84 shows such an adjustment.

Front	2218	candles.
Side	578	„
„	578	„
Back	111	„
	0485	4 = 871.

The light produced by the same machine, under the same conditions, except the carbons being adjusted in one vertical line (Fig. 85), was 525 candles. This would seem to indicate that nearly 66 per cent. more light was produced by this adjustment of the carbons; but a close study of the conditions proves that such is not the case, and that there is no advantage to be derived from such adjustment, except when the light is intended to be used in one direction only.

FIG. 84. FIG. 85.

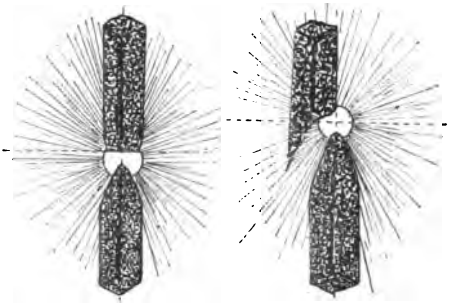

The following is a statement upon this point, in the report of Mr. Jas. N. Douglass, Engineer to the Trinity House:—

"I have found this arrangement of the carbons (the axis of the bottom carbon nearly in the same vertical plane as the front of the top carbon), and assuming the intensity of the light with the carbons having their axes in the same vertical line to be represented by 100, the intensity of the light in four directions in azimuth, say E., W., N., and S., will be nearly as follows:

East or front intensity	287 to 100
North or side „	116 „ 100
South „ „	115 „ 100
West or back „	38 „ 100
	557 ÷ 4 = 139 to 100

* * * * * *

"In measuring the candle-power of the light produced by each machine, I have given the mean intensity obtained in the direction of the photometer, the carbons in lamp working with the Holmes and Alliance machines being always arranged with the axes in the same vertical line, and the carbons in the lamp working the Gramme and Siemens' machine being always arranged with the front edge of the top carbon nearly on the centre of the bottom carbon."

It is, therefore, evident that the results given by Mr. Douglass must be divided by 2·87 in making a comparison with those obtained by the Franklin Institute Committee.

The following abstract from a report of Professor Tyndall, addressed to the Trinity Board, upon experiments carried out to ascertain the relative values of different apparatus, completes the list as regards other machines than the preceding.

The machines experimented on were the following:—

1. Holmes' machines, which have been already established for some years at the South Foreland lighthouse.
2. Gramme's machine.
3. Two Gramme's machines coupled together.
4. Siemens' large machine.
5. Siemens' small machine.

M. Tresca communicated an interesting paper to the Academy of Sciences, containing account of a series of experiments made in the establishment of MM. Sautter and Lemonnier, to ascertain the amount of work performed by the Gramme machine for the production of light.

The high speed at which the Gramme machine is driven, rendered it difficult to employ a dynamometer, which should not make more than 250 revolutions per minute. The diagrams obtained were, however, satisfactory after some preliminary trials. The work done has thus been accurately determined, but this was not the case with the luminous intensity. This latter was measured direct by a photometer with two discs, one illuminated solely by a Carcel lamp, and the other by the electric lamp. One of these discs appeared of a green hue in relation to the other, which was rose-tinted, and amongst the various methods tried, it was found decidedly the best to correct the difference of these tints by the interposition of two Carcel lamps, burning 1·48 oz. per hour, and at a suitable distance from the photometer, the electric light being placed at a distance of 131·23 feet in the first, and 65·61 feet in the second trial.

In spite of the uniformity of the electric current supplied to the regulator, the light, on account of the irregularity in the nature of the carbons, showed oscillations, which for the most

TABLE SHOWING THE COST, DIMENSIONS, WEIGHT, HORSE-POWER ABSORBED, AND LIGHT PRODUCED BY THE DYNAMO-ELECTRIC MACHINES, TRIED AT THE SOUTH FORELAND, 1876–77.

Names of Machines.	Dimensions.			Weights.	Horse-power absorbed.	Revolutions per minute.	Light produced in Standard Candles.		Light produced per horse-power in Standard Candles.		Size of Carbons.
	Length.	Breadth.	Height.				Condensed beam.	Diffused beam.	Condensed beam.	Diffused beam.	
	ft. in.	ft. in.	ft. in.	tons. cwt. qr. lb.							
Holmes	4 11	4 4	5 2	2 11 1 7	3·2	400	1523	1523	476	476	$\frac{3}{8}$ by $\frac{3}{8}$
Alliance	4 4	4 6	4 10	1 16 1 21	3·6	400	1953	1953	543	543	$\frac{3}{8}$ „ $\frac{3}{8}$
Gramme (No. 1)	2 7	2 7	4 1	1 5 2 0	5·3	420	6663	4016	1257	758	$\frac{1}{2}$ „ $\frac{1}{2}$
Gramme (No. 2)	2 7	2 7	4 1	1 5 2 0	5·74	420	6663	4016	1257	758	$\frac{1}{2}$ „ $\frac{1}{2}$
Siemens (Large)	3 9	2 5	1 2	0 11 2 18	9·8	480	14818	8932	1512	911	$\frac{11}{16}$ „ $\frac{11}{16}$
Siemens (Small, No. 58) ...	2 2	2 5	0 10	0 3 3 0	3·5	850	5539	3339	1582	954	$\frac{1}{2}$ „ $\frac{1}{2}$
Siemens (Small, No. 68) ...	2 2	2 5	0 10	0 3 3 0	3·3	850	6864	4138	2080	1254	$\frac{1}{2}$ „ $\frac{1}{2}$
2 Holmes ...	9 10	4 4	5 2	5 2 2 14	6·5	400	2811	2811	432	432	$\frac{1}{2}$ „ $\frac{1}{2}$
2 Gramme ...	5 2	2 7	4 1	2 11 0 0	10·5	420	11396	6869	1085	654	$\frac{11}{16}$ „ $\frac{11}{16}$
2 Siemens (Small Nos. 58 & 68)	4 4	2 5	0 10	0 7 2 0	6·6	850	14134	8520	2141	1291	$\frac{11}{16}$ „ $\frac{11}{16}$

*** These last three measures were taken with the machines coupled in "multiple arc," the effect being a considerable increase in light produced for power expended.

part were perceptible only in the photometric determinations; but on this account a great difficulty arose in determining exactly the intensity and its definition in relation to the expenditure of power.

It was only possible to avoid these drawbacks by increasing the number of trials, and limiting their duration to very short periods. The standard lamp having been placed in such a position as to balance the average intensity of the electric light, the apparatus was kept at work during a certain time, and at the instant that an apparent equality was observed, a signal was given to the experimenter stationed at the dynamometer, and a diagram comprising a period of a few seconds was obtained. Another observer recorded the speed of the dynamometer per minute, and the dynamometer diagram was renewed only at a fresh signal from the operator at the photometer. The following tables give all the data obtained from the successful experiments thus conducted.

In order to ascertain the number of revolutions of the main shaft of the magneto-electric machine, it was necessary to make certain that there was no slipping of the driving belt. By means of various experiments, the speed of the two shafts was tested by means of two counters, and it was thus found, in the first trial, that the actual ratio of the speed was 5·18, the ratio calculated from the diameters of the pulleys and the thickness of belts being 5·26. The speed of the Gramme machine shaft was thus found by multiplying the mean speed of the dynamometer shaft by 5·22, which gave for the first series of trials 1264 turns per minute; in the second series, the ratio of speeds being only 3·65 and the mean speed of the dynamometer 239 turns per minute, the number of revolutions of the machine was $239 \times 3{\cdot}65 = 872$. The apparatus which gave a light of 1850 Carcel lamps is arranged as follows: The horizontal shaft carries two series of conductors placed symmetrically, the one on the left receiving the current from 15 bobbins spaced around a soft-iron ring. In the intervals between these are 15 other bobbins in connection with the conductor placed on the other side of the shaft. The two currents combine when the bobbins turn around the shaft in

front of the poles of the four electro-magnets, put in operation by a portion of the current, the balance being led off to the electric lamp. The following are the leading dimensions of the machine :—

Electro-magnets :		
Diameter of the electro-magnet	2·75	in.
Length	15·90	„
Diameter of coil	5·19	„
Diameter of wire	·0125	„
Weight of copper rolled around each electro-magnet ...	52·8	lb.
Bobbins :		
Outside diameter of soft-iron ring	7·67	in.
Inside „ „ „	6·18	„
Width of soft-iron ring	4·68	„
Outer diameter of bobbin	9·05	„
Inner „ „	4·72	„
Diameter of wire	·01	„
Total weight of wire	308	lb.
Diameter of conductor cylinders	3·54	in.
„ lamp wire	·03	„
Machine :		
Total length, including pulley	31·5	
„ height	23·03	„
„ width	21·65	„

The machine giving a light of 3000 Carcel lamps is more simple, as it has only a single series of conductors and small bobbins, and two electro-magnets only. The following are its leading dimensions :—

Electro-magnets :		
Diameter	2·75	in.
Length	13·97	„
Diameter of coil	4·72	„
„ wire	0·15	„
Weight of copper around each electro-magnet	31·5	lb.
Bobbins :		
Outside diameter of soft-iron ring	6·61	in.
Inside „ „ „	4·84	„
Width of soft-iron ring	3·97	„
Outside diameter of bobbin	4·68	„
Inside „ „	4·05	„
Diameter of wire	·007	„
„ conductor cylinder	3·5	„
„ wire to lamp	·034	„
Machine :		
Total length, including pulley	25·6	„
„ height	19·92	„
„ width	16·14	„

The large machine supplied a lamp made at the works of M. Gramme, with carbons of ·123 square inches in section; the lamp for the smaller machine was made by M. Serrin, with carbons of similar dimensions.

The following tables summarize the results obtained:—

TABLE I.

EXPERIMENTS WITH LARGE MACHINE, MADE OCTOBER 16TH, 1875.

Ratios of distances of electric light and Carcel lamp from photometer... 40 : ·93
Ratios of intensities ... ... 40 : ·93 = 1850

Numbers of Diagram.	Revolutions of Dynamometer per minute.	Mean ordinates given by the Diagrams.	Foot-pounds of Work per second.
		in.	
1	238	·885	4883
2	251	·744	4324
3	248	·854	4916
4	244	·653	3693
5	241	·614	3226
6	244	·654	3716
Mean ...	244	...	4127 = 7·5 H.-P. per min.

Work done per 100 burners ... 7·5 : 1850 = ·405 H.-P.
Work per burner per second ... 2·23 foot-pounds.

TABLE II.

EXPERIMENTS WITH SMALL MACHINE, MADE DECEMBER 4TH, 1875.

Ratios of distances of electric light and Carcel lamp from photometer ... 20 : 1·15
Ratios of intensities ... ... 20 : 1·15 = 302·4

Numbers of Diagram.	Revolutions of Dynamometer per minute.	Mean ordinates of Diagram.	Work done in Foot-pounds per second.
		in.	
1	234	·279	1452
2	238	·262	1445
3	244	·292	1651
Mean ...	239	...	1516 = 2·75 H.-P.

Work done per 100 burners ... 2·75 : 302 ·91 H.-P.
Foot-pounds per burner per second 4·97

The machines worked with regularity for a sufficient time to prove the absence of heating. Moreover, the work done was very uniform during the experiments, although one of them was considerably prolonged.

As regards the cost of different modes of lighting, the following data are of interest. The consumption of oil for 1850 Carcel burners per hour equals $1850 \times 1{\cdot}48$ oz. $= 2738$ oz., or about 6800 cubic feet of gas. Under these conditions the cost of fuel would be only the hundredth part of cost in oil, and one-fiftieth part of the cost of gas-lighting in Paris. The comparison is less favourable for smaller machines, for from the data given it will be seen that for the large machine, each Carcel burner requires 2·23 foot-pounds, and for the small machine to 4·97 foot-pounds, or double the former. This expenditure of work would, according to M. Heilmann, be increased to 1·85 foot-pounds for each burner in a hundred-light machine.

A lamp of 100 burners, to light a workman as well as would an ordinary lamp placed 18 inches away from him, may be situated 16·5 feet away; a lamp of 300 burners may be 28·5 feet, and one of 1850 burners at 70 feet 4 inches distant; and these figures show that the largest sizes of lamps may be most usefully employed for lighting manufactories.

During the competitive trials at the Franklin Institute, as to the relative efficiency of the machines as noted in the preceding pages, Professors Houston and Thomson took the opportunity thus afforded to make a careful study of many interesting circumstances which influence the efficiency of these machines.

A convenient arrangement of the particular circumstances to be discussed is—(1) those affecting the internal work of the machines; (2) those affecting the external work; and (3) the relations between the internal and external work.

The mechanical energy employed to give motion to a dynamo-electric machine is expended in two ways: (1) in overcoming the friction and the resistance of the air; and (2) in moving the armature of the machine through the magnetic field, the latter, of course, constituting solely the energy avail-

able for producing electrical current. The greatest amount of power expended in the first way was noticed to be about 17 per cent. of the total power employed. This expenditure was clearly traceable to the high speed required by the machine. The speed, therefore, required to properly operate a machine is an important factor in ascertaining its efficiency. The above percentage of loss may not appear great; but when it is compared with the total work done in the arc as heat, constituting as it did in this particular instance over 50 per cent. of the latter, and about 33 per cent. of the total work of the circuit, its influence is not to be disregarded. In another instance the work consumed as friction was equal to about 80 per cent. of that appearing in the arc as heat, while in the Gramme machine experimented with this percentage fell to 20 per cent. of that which appeared in the arc as heat, and was only about 7 per cent. of the total power consumed in driving the machine.

In regard to the second way in which mechanical energy is consumed, in overcoming the resistance necessary to move the armature through the magnetic field, or, in other words, to produce electrical current, it must not be supposed that all this electrical work appears in the circuit of the machine, since a considerable portion is expended in producing local circuits in the conducting masses of metal, other than the wire, composing the machine.

The following instances of the relation between the actual work of the circuit, and that expended in local action, will show that this latter is in no wise to be neglected. In one instance an amount of power, somewhat more than double the total work of the circuit, was thus expended. In this instance also it constituted more than five times the total amount of power utilized in the arc for the production of light. In another instance it constituted less than one-third the total work of the circuit, and somewhat more than one-half the work in the arc.

Of course, work expended in local action is simply thrown away, since it adds only to the heating of the machine. And, since the latter increases its electrical resistance, it is doubly injurious.

The local action of dynamo-electric machines is analogous to the local action of a battery, and is equally injurious in its effects upon the available current.

Again, in regard to the internal work of a machine, since all this is eventually reduced to heat in the machine, the temperature during running must continually rise until the loss by radiation and convection into the surrounding air equals the production, and thus the machine will acquire a constant temperature. This temperature, however, will differ in different machines, according to their construction, and to the power expended in producing the internal work, being, of course, higher when the power expended in producing the internal work is proportionally high.

If, therefore, a machine during running acquires a high temperature when a proper external resistance is employed, its efficiency will be low. But it should not be supposed that because a machine, when run without external resistance—that is, on short circuit—heats rapidly, that inefficiency is shown thereby. On the contrary, should a machine remain comparatively cool when a proper external resistance is employed, and heat greatly when put on short circuit, these conditions should be regarded as a proof of its efficiency.

In regard to the second division, the external work of the machine, this may be applied in the production of light, heat, electrolysis, magnetism, etc.

Where it is desired to produce light, the external resistance is generally that of an arc formed between two carbon electrodes. The resistance of the arc is, therefore, an important factor in determining the efficiency. To realize the greatest economy, the resistance of the arc should be low, but nevertheless should constitute the greater part of the entire circuit resistance.

In some measurements the resistance of the arc was surprisingly low, being in one instance 0·54 ohm, and in another 0·79 ohm. It was, however, in some instances as high as 3·18 ohms. The amount of work appearing in the arc, as measured by the number of foot-pounds equivalent, is not necessarily an index of the lighting power.

A few remarks on the economical production of light from electrical current may not be out of place. The light emitted by an incandescent solid will increase as its temperature is increased. In the voltaic arc, the limit to increase of temperature is in the too rapid vaporization of the carbon. Before this point is reached, however, the temperature is such that the light emitted is exceedingly intense. No reliable method of measuring the temperature of the arc has as yet been found.

A well-known method of obtaining light from electrical currents is by constructing a resistance of some material, such as platinum, having a high fusing point, and heated to incandescence by the passage of the current. When platinum is employed, the limit to its increase of temperature is the fusing point of the platinum, which is unquestionably but a fraction of the temperature required to vaporize carbon. Were the falling off in the amount of light emitted merely proportional to the decrease in temperature, the method last described might be economical. Unfortunately, however, for this method, many facts show that the decrease in the light emitted is far greater than the decrease of the temperature. Most solids may be heated to 1000° F. without practically emitting light. At 2000° F. the light emitted is such that the body is said to be a bright red; at 4000° F., the amount of light will have increased more than twice, probably as much as four times that emitted at 2000° F. It is reasonable to suppose that, with a further increase of temperature, the same ratio of increase will be observed, the proportionate increase in luminous intensity far exceeding the increase in temperature.

It would, therefore, appear that the employment of a resistance of platinum, or other similar substance, whose temperature of alteration of state, as compared with that of carbon, is low, must be far less economical than the employment of the arc itself, which as now produced has been estimated as about two or three times less expensive than gas.

Indeed, it would seem that future improvements in obtaining light from electrical currents will rather be by the use of

a sufficient resistance in the most limited space practicable, therefore obtaining in such space the highest possible temperature.

Perhaps the highest estimate that can be given of the efficiency of dynamo-electric machines, as ordinarily used, is not over 50 per cent.; measurements have not given more than 38 per cent. Future improvements may increase this proportion. Since the efficiency of an ordinary steam engine and boiler in utilizing the heat of the fuel is probably over-estimated at 20 per cent., the apparent maximum percentage of heat that could be recovered from the current developed in a dynamo-electric machine would be over-estimated at 10 per cent. The economical heating of buildings by means of electricity may, therefore, be regarded as totally impracticable.

In respect to the relations that should exist between the external and the internal work of dynamo-electric machines, it will be found that the greatest efficiency will, of course, exist where the external work is much greater than the internal work, and this will be proportionately greater as the external resistance is greater. Our measurements gave, in one instance, the relation of ·82 ohm of the arc to ·49 ohm of the machine, a condition which indicates economy in working. The other extreme was found in an instance where the resistance of the arc was 1·93 ohm, while that of the machine was 4·60 ohms, a condition indicating wastefulness of power.

CHAPTER VII.

SIMPLE MATHEMATICAL CONSIDERATIONS CONCERNING ELECTRIC LIGHTING.

MATHEMATICAL considerations of a subject so little known as electric lighting, when made with regard to the determination of maximum effect, must be taken with the limitation set by experience. The following quotations from well-known sources are given with every emphasis as to their value, and will afford to the reader of calculating turn, reliable data upon which to found his deductions.

Mr. Desmond Fitzgerald has remarked that the question whether Ohm's law is applicable to dynamo-electric circuits has been raised, and some confusion prevails as to the real points at issue. Investigators are finding out two facts—that there is in nature no dynamic force varying simply as the number of cells in series of a battery, or corresponding with what is defined as electro-motive force, and no inertia varying according to what is defined as electrical resistance. It is observed, also, that the effects of varying these "current elements" are very different in the two cases of the dynamo-electric and the voltaic circuits. Still, this does not mean that the law of Ohm is incorrect as a law of phenomena—an expression indicating a necessary relation—but, from a physical point of view, as empirical as other mathematical laws in which causation is lost sight of.

In the case of any electro-motor the equation $I = \frac{E}{R}$ is strictly applicable.

In the voltaic battery, however, a variation of R does not

necessarily affect E, which is altogether independent of such variation when this occurs in the external portion of the circuit. Thus, we have generally $I \propto \frac{1}{R}$, or current varies inversely as the resistance in circuit.

Again, a variation of E does not necessarily affect R; and, when the external resistance of the circuit bears a high ratio to the battery resistance, a variation of the electro-motive force, from E to $E_{,}$—an addition to, or diminution of, the number of cells in series—causes the current to vary approximately in the ratio $\frac{E_{,}}{E}$. Accurately, the variation in any case is determined by the ratio $\frac{E_{,} R}{E R + E \rho}$, where ρ is the resistance of the cell or cells added or subtracted. Thus,

$$\frac{E_{,}}{E} \times \frac{E_{,} R}{E R + E \rho} = \frac{E_{,}}{R + \rho}.$$

Thus, in the case of a telegraph circuit, for instance, we have approximately, $I \propto E$. On the other hand, in the dynamo-electric machine, converting into electrical work a given horse-power, $I \propto \frac{1}{\sqrt{R}}$, since, the ratio $\frac{E^2}{R}$ being constant, $E^2 \propto R$, $E \propto \sqrt{R}$, and $\frac{E}{R} \propto \frac{\sqrt{R}}{R} = \frac{1}{\sqrt{R}}$. Thus, any variation of R in this case necessarily affects E.

Again, any variation of E necessarily affects R; and, the product E I being constant, we have $I \propto \frac{1}{E}$, a somewhat startling result, which, to some observers, has appeared contradictory to the law of Ohm. With this, however, it is in perfect accord—in effect, since $E \propto \sqrt{R}$, $R \propto E^2$, and $\frac{E}{R} \propto \frac{E}{E^2} = \frac{1}{E}$; or, when E is varied, the current varies inversely as the electro-motive force, because the resistance varies as the square of this value.

It will be seen that $R \propto E^2 = \frac{1}{I^2}$, and that the same quantity of work will be done by the current whatever may be the resistance in circuit.

If h.p. be taken to express the total horse-power converted into electrical work (in the whole circuit), under the best conditions, with a Gramme machine of the form experimented with at the Franklin Institute,

$$\text{H.P.} = \text{h.p.} \times 1{\cdot}39,$$

and the efficiency of the machine is expressed by

$$\frac{\text{h.p.}}{\text{H.P.}} = {\cdot}72 \text{ (nearly)}.$$

Or the machine can convert into electrical work 72 per cent. of the energy expended upon it.

Let E = the electro-motive force, in volts, acting in a circuit;

R = the total resistance, in ohms, of the circuit;

r = resistance of the voltaic arc obtained;

H.P. = h.-p. of the prime motor working the dynamo-electric machine;

h.p. = the h.-p. absorbed in the production of electrical work in the circuit;

λ = the intensity, in standard candles, of the electric light so arranged as to illuminate equally in all horizontal directions;

Λ = the intensity of the light in one particular direction; the light being arranged to give the maximum illumination (without reflectors) in this direction.

The energy of the current, or the mechanical equivalent of the work and heat produced by it *per hour*, will be

$$W = \frac{E^2 \times 2654}{R} \text{ ft.-lbs.} = \frac{E^2 \times 1{\cdot}18}{R} \text{ foot-tons.}$$

H.P. absorbed in the current $\left(\frac{\text{energy in ft.-lbs.}}{33{,}000 \times \text{time in min.}}\right)$ will be

$$\text{h.p.} = \frac{E^2}{R \times 747}.$$

The ratio $\frac{\text{h.p.}}{\text{H.P.}}$ is the measure of the efficiency of dynamo-electric machines. In the case of Gramme's machine, under the best conditions, we have

$$\text{H.P.} = \text{h.p.} \times 1{\cdot}39.$$

The horse-power absorbed in the arc itself is

$$\text{h.p.} \times \frac{r}{R}.$$

The ratio of this latter value to h.p., or

$$\frac{r}{R} = \frac{\text{h.p.} \times r \times 747}{E^2},$$

is the measure of the efficiency of the electrical circuit in the production of the greatest quantity of light with a given quantity of electrical energy.

In the experiments with Gramme's machine made by the Committee of the Franklin Institute, the light, in standard sperm candles, produced by the voltaic arc was

$$\lambda = \text{h.p.} \times \frac{r}{R} \times 1044 \text{ (candles)} \quad . \quad . \quad . \quad \text{(I.)}$$

when the intensity of the light was approximately equal in every direction. But, when the carbons are so adjusted as to give the best effect with the photometer in a given position, we may multiply the former value by 2·87, and we have

$$\Lambda = \text{h.p.} \times \frac{r}{R} \times 2996 \text{ (candles)} \quad . \quad . \quad . \quad \text{(II.)}$$

Expressing these equations in a different form, we have

$$\lambda = I^2 r \times 1{\cdot}4 \quad . \quad . \quad . \quad . \quad . \quad . \quad \text{(I}a\text{.)}$$
$$\Lambda \times I^2 r \times 4{\cdot} \quad . \quad . \quad . \quad . \quad . \quad . \quad \text{(II}a\text{.)}$$

It should be remembered that these values are obtainable only under the most carefully arranged conditions.

Although the light cannot be subdivided without very considerable loss, it is not to be admitted that, if a given total quantity of light be produced with one hundred lamps, it is one hundred times as expensive as if it were produced in one lamp. If we use two lamps instead of one, and place them in series, the original arc resistance, l, is not necessarily doubled; indeed, it may be preserved constant, in which case we should have $\frac{C^2 l}{2}$ for each light, and the original value, $C^2 l$, for the two. And, if we place four lamps in parallel circuit, the total resistance may be reduced nearly fourfold, so that we may obtain twice the original current with half the E.M.F. in action. Thus $C^2 l$, or $\frac{E^2}{l^2} l$, becomes

$$\frac{\left(\frac{E}{2}\right)^2}{\left(\frac{l}{4}\right)^2} \times \frac{l}{4} = \frac{4\,E^2}{l^2} \times \frac{l}{4} = C^2\,l;$$

the theoretical value for each light being $\left(\frac{C}{2}\right)\ l = \frac{C^2\,l}{4}$, and that of the four $C^2\,l$. The loss, when the light is subdivided, is doubtless due to an increase in the quantity of heat, which must be expended before any luminous effect is produced. The voltaic arc is far more economical, as a producer of light, than any devices for the incandescence of solids.

Mr. Louis Schwendler has made a report on the electric light, as to the advisability of adopting it for Indian railway stations. The report is exceedingly valuable, but too long to give complete. The following is a *précis*:—

Economy of the electric light.—The energy of the standard candle was ascertained by direct experiment. It was found that the standard candle, in order to produce the unit of light, does work at the rate of 610 meg-ergs per second at the least. In fact, it is highly probable that the standard candle, in order to produce the unit of light, works up to more than double that amount (1365 meg-ergs per second).

Further, by direct experiment, it was ascertained that the unit of light, as produced in an electric arc by any one of the dynamo-electric machines under trial, and through a leading wire offering not more than 0·1 Siemens' unit resistance, is produced at the rate of not more than 20 meg-ergs per second, including all the work transmitted, the light being measured in a line which passes through the centre of the arc, and stands normal to its axis. Hence the probable engineering margin in favour of the electric light is between 30 to 70, or equal to a mean of 50.*

Dynamo-electric machine A produces the unit of light at a rate of not more than 10 meg-ergs per second. Hence it may be safely asserted that the electric light produced by dynamo-

* A refers to a Siemens machine, medium size.
B " " small "
C " Gramme machine, workshop pattern.
D " "

electric machines is, as an average, 50 times cheaper than light by combustion. This is, however, true only as long as the light is produced in one arc. If more than one light is produced in the same circuit by the same current, the external or available light becomes rapidly dearer with increase of the number of lights produced. For this reason already, if not for many others, the division of light must result in an engineering failure. It is in the nature of the electric light that it should be used in great intensity in one point, instead of small intensities in many points.

Current produced by dynamo-electric machines.—These currents, as the insertion of a Bell telephone (used as a shunt) will easily prove, are not steady. The dynamo-electric machine with the greatest number of sections in the induction cylinder gives the steadiest current. Twelve sections are found to be necessary and sufficient.

Influence of speed.—The current produced by any dynamo-electric machine through a given constant total resistance in circuit increases permanently with the speed of the induction cylinder. This increase of current for low speeds is more than proportional to the speed; afterwards it becomes proportional, and for high speeds the increase of current is less than proportional to the speed. The current has, however, no maximum for any speed, but reaches its greatest value at an infinite speed. This same law, as the total resistance in circuit is supposed to be constant, of course holds good also for the electro-motive force of the dynamo-electric machine.

Influence of external resistance.—Keeping the speed constant, the electro-motive force of any dynamo-electric machine decreases rapidly with increase of external resistance. This decrease is more rapid the smaller the internal resistance of the dynamo-electric machine is made. Hence the currents must decrease much more rapidly than proportionally to the total resistance in circuit. As in the case of speed, the electro-motive force has no maximum for a certain external resistance, but approaches permanently its greatest value for an external resistance equal *nil*. It appears that the function which connects E.M.F. and speed is the same as that which

connects E.M.F. and external resistance. We have only to substitute for speed the inverse of resistance, and *vice versâ*.

Maximum work by a current in the resistance r.—As the current decreases much more rapidly than the total resistance in circuit increases, this resistance r should invariably be made smaller than the remaining resistance of the circuit, *i.e.* smaller than the internal resistance of dynamo-electric machines plus resistance of leading wires.

The electro-motive force of a dynamo-electric machine as a function of the resistance and speed.—It appears that the following two formulæ are most probably correct for all dynamo-electric machines if the loss of current by transmission is taken into account:—

$$E = \kappa \left\{ 1 - \frac{1}{e^{\left(\frac{a}{m + r}\right)^2}} \right\}$$

E the E.M.F., m the internal resistance, and r the external resistance, including resistance of leading wire. κ and a are independent of m and r, and are functions of the speed of the induction cylinder, and contain also the construction coefficients. e is the basis of the natural logarithm. Further—

$$E' = \kappa' \left\{ 1 - \frac{1}{e^{\left(\frac{v}{a'}\right)^2}} \right\}$$

E′ the E.M.F., and v the speed of the induction cylinder. κ' and a' are independent of v, and are functions of m and r only. These two functions, E and E′, correspond to all the characteristics of the curves found by experiment, and they also fulfil the limit conditions.

Resistance and electro-motive force of the electric arc.—There appears to be no doubt that an appreciable E.M.F. in the arc is established, which acts in opposite direction to the electro-motive force of the dynamo-electric machine. This E.M.F. of the arc increases with the current passing through the arc. The resistance of the arc for constant length is also a function of the current passing through it, *i.e.* the

resistance of the arc decreases with the current (see the following table) :—

Current in Webers.	Resistance of the Arc in S.U.	E.M.F. of the Arc in Volts.
28·81	0·91	2·02
23·87	1·72	1·91
16·27	1·97	1·86

The E.M.F. in an electric arc, opposite to the electromotive force of the dynamo-electric machine, constitutes another reason against the unlimited divisibility of the electric light.

Regularity of the production of currents by dynamo-electric machines at different periods.—If the brushes are well set, and if they are placed as nearly as possible in the neutral line of the commutator, the production of current is perfectly regular, and measurements taken through the same external resistance at the most distant periods agree most perfectly with each other, supposing the correction for variation in speed and internal resistance to be applied. Disregarding the heating of the dynamo-electric machine by the current, the time required to arrive at dynamic equilibrium, *i.e.* when force transmitted, current, and magnetism received are constant, is very short indeed, especially for the strong currents, which alone are made use of for lighting.

Formula for controlling the test-results.—As the power which is represented by the measured current working through a given resistance can never exceed the original power transmitted to the machine, we can, from current, resistance, and force measurements, frame a formula which checks the probability of the results. This formula is :—

$$C \leqq 0{\cdot}33 \sqrt{\frac{W' - w'}{r + m}}.$$

W′ is the total power consumed by any dynamo-electric machine when producing the observed current C in a circuit

of resistance $r + m$; w' is the power consumed by the dynamo-electric machine when producing no current (*i.e.* driven empty, circuit open, external resistance infinite); r is the external resistance, and m the internal resistance. In the above formula C is in webers, W' and w' in meg-ergs* per second, and r and m in Siemens' units. Of late, exaggerated statements of the performance of dynamo-electric machines have been made, the absurdity of which would have become evident at once if the above formula had been applied as a check to the results.

Co-efficient of transmission.—If all the work $(W' - w')$ were transformed into available current in the external circuit, then $\frac{W' - w'}{W}$ = unity, where W is the total work performed by the observed current in a circuit of known resistance. In practice it will be found, however, that $\frac{W' - w'}{W} > 1$ (for many reasons). This expression, $\frac{W' - w'}{W}$, is called the co-efficient of transmission, and designated by the letter κ. κ is different for the different dynamo-electric machines which have been tried, and decreases with increase of current. Producing currents above 24 webers, the following average values of κ have been obtained:—

Name of Dynamo-electric Machine.	κ	Average Current in Webers.
C	1·01	31·0
A and B	1·12	31·1
D	1·28	27·9

Co-efficient of efficiency.—$\varepsilon = \frac{w}{W' - w'}$; w is the useful work done in the circuit by the current. As the resistance of dynamo-electric machines and leading wires cannot be made *nil*, this

* The meg-erg = 100 mètre-gramme-second units of work = 10·1926 grammètres.

co-efficient must be always smaller than unity. For currents above 24 webers we have:—

Name of Dynamo-electric Machine.	ϵ	Average Current.
A	0·62	29·5
B	0·53	31·0
C	0·47	32·6
D	0·30	27·9

Hence the dynamo-electric machine A converts 62 per cent. of the total energy transmitted into useful work, while 38 per cent. is lost in heating the machine. Dynamo-electric machine D converts 30 per cent. of the total energy transmitted into useful work, and loses 70 per cent. in heating its own wires.

Practical mechanical equivalent of the currents produced by dynamo-electric machines.—$\eta = \frac{W' - w'}{C}$, where C is the current in webers. Above 24 webers the different dynamo-electric machines produce the weber at the following consumption of power:—Dynamo-electric machines A and B produce one weber at 686·5 meg-ergs per second; dynamo-electric machine C produces one weber at 736 meg-ergs per second; dynamo-electric machine D produces one weber at 920 meg-ergs per second.

Regularity of the electric light.—If the resistance external to the dynamo-electric machine is represented by the resistance of the arc only, *i.e.* resistance of leading wires equal *nil*, then although the light is naturally the most powerful, it is the least steady, since any variation of the resistance of the arc has then evidently the largest influence on the current and on the light. By connecting across the electro-magnet of an electric lamp another electro-magnet which acts as a shunt, and adjusting the two electro-magnets in such a manner that they produce equal extra currents when variations in the primary current take place, the regularity of the working of the lamp is greatly enhanced. An electro-static shunt will have

a similar effect. For strong lights or strong currents, the electro-magnetic shunt is best; for weak lights or weak currents the electro-static shunt is best. The lamp should be constructed mechanically so well and delicately that the carbon points run together with a minimum tension of the spring of the lamp. When making photometric measurements, to get more trustworthy results, it is best to use a flat carbon (two to three millimetres thick) as the positive electrode, and a carbon of the usual form as the negative electrode. The light is to be observed in a line normal to the flat surface of upper carbon, and passing through the centre of the arc. In this manner the largest quantity of total light produced is measured, and, moreover, the ratio between total and external light is more constant. The lower carbon should be invariably of less section than the upper carbon. Further, when producing the light by a short arc, which it is always advisable to do, the lower carbon should be natural carbon. When the arc is long, the flame by combustion of the carbons is large. This appears to be due to the fact that for a long arc the vacuum formed round the carbon points by expansion of the air by heat is less complete than in an arc of shorter length. The consumption of the carbon points is due more to combustion than to disintegration. The incandescent part of the carbon points has so much more intensity of light than the flame that the latter causes a shadow. The hissing noise produced by the electric arc is due to the formation of a vacuum round the incandescent carbon points. The noise is much stronger in a short than in a long arc. It may also be due in part to the disintegration of the carbon points. The noise of the electric light in a quiet room is simply unbearable. This speaks only against the use of the electric light for domestic purposes.

There can be no doubt that one length of arc is best under given circumstances, considering both the intensity and regularity of the light. The light permanently decreases with length of arc, hence the arc should be made as short as possible. This would, however, be bad for the constancy of the light, and may also spoil the dynamo-electric machine. Hence adjust the commutator by turning the brushes in the

direction of the rotation until only small sparks are observed. If this is impossible, make the arc longer by lessening the tension of the spring. In this manner the best length of arc can be experimentally found. This would give the best tension of the spring at the starting-point. Now let the dynamo-electric machine run for several hours, and make the same experiments, when the best tension of the spring will be found somewhat less. Take the mean of the two tensions and fix the micrometer screw.

Proportionality of light and current.—Although the light produced in the arc must be very nearly proportional to the total energy consumed in the arc (minus the energy expended in giving the disintegrated carbon particles velocity), the resistance of the arc decreasing with increase of current, it follows that the light cannot be proportional to the square of the current. If we make the highly probable supposition that the resistance of an arc of constant length is inversely proportional to the current which passes through, then the light produced would be proportional to the current. This appears to be the case. The conduction of the arc appears to be due to two causes, rarefied air and carbon particles flying in both directions. Both causes would point towards an inverse proportionality between current and resistance of arc.

As to the divisibility of the electric light, Mr. Preece has contributed to the *Philosophical Magazine* a very valuable paper, in which he has simply extended the known laws of heating in the galvanic circuit, with respect to the application to the subject of lighting by electricity. He explains that the theory of the electric light cannot be brought absolutely within the domain of quantitative mathematics, for the reason that we do not yet know the exact relation that exists between the production of heat and the emission of light with a given current; but we know sufficient to predicate that what is true for the production of heat is equally true for the production of light beyond certain limits.

The work done in a battery, or any source of current electricity, is expended outside the battery in a closed circuit in the form of heat. When this heat acquires a certain

temperature per unit mass, we have light. If the heat be confined to a mass of metal wire like platinum, we have light by incandescence; if it be expended in the transference of minute particles of incandescent matter like carbon across an air-space, we have the electric arc. The exact relations between current, heat, temperature, mass, and light have yet to be determined by experiment.

The arc is thus a form of energy developed in one point of a circuit, which is the exact equivalent of another form of energy expended in another point of the circuit. Thus, if we produce light by a galvanic battery, it is the equivalent of chemical work done in the battery. If it be produced by a dynamo-machine driven by a steam engine, it is the equivalent of coal consumed in the furnace. The object to be attained in any economical utilization of this energy is to convert the greatest possible portion of it into light. Now, the relations that exist between the work done, the current flowing, the resistances present, and the heat developed are easily demonstrated. The work done, W, in any circuit varies directly with the electro-motive force E in that circuit, and with the quantity of electricity, Q, that passes through it, or

$$W = E\,Q;$$

but by Ohm's law the electro-motive force is equal to the product of the resistance R of the circuit into the current C flowing, or

$$E = C\,R;$$

and by Faraday's law the quantity of electricity passing depends upon the strength of current C and the time it flows, t, or

$$Q = C\,t.$$

Therefore, substituting these two values in the above equation, we get

$$W = C^2\,R\,t;$$

in which we have what is known as Joule's law, which gives us the work done, W, or its equivalent, the heat generated, H, in any circuit. By regarding the time as constant, we can put the equation

$$H = C^2\,R \quad . \quad . \quad . \quad . \quad (1)$$

Now let us take the case of a battery whose electro-motive force is E, and whose internal resistance is ρ. Let the resistance of the connecting wires be r. Let us also have a particular resistance l, which may be a wire to be heated to incandescence, or a lamp to be lit by the arc; then by Joule's law (1),

$$H = C^2 (\rho + r + l);$$

but by Ohm's law,

$$C = \frac{E}{\rho + r + l},$$

$$\therefore H = \frac{E^2}{\rho + r + l}.$$

Confining our attention for the present to the heat generated, H, this will be distributed throughout the circuit; and that in the resistance l will be

$$H \times \frac{l}{\rho + r + l} = \frac{E^2 l}{(\rho + r + l)^2} \quad . \quad . \quad (2)$$

Now, if we suppose n resistances in circuit joined up in series, then the total heat generated will be

$$H' = \frac{E^2 n l}{(\rho + r + n l)^2} \quad . \quad . \quad . \quad (3)$$

If we differentiate this fraction with respect to $n\ l$ and put it equal to nothing, we can find when the heat generated in these resistances becomes a maximum; that is,

$$\frac{d H'}{d n l} = \frac{1}{(\rho + r + n l)^4} [(\rho + r + n l)^2 E^2 - 2 E^2 n l (\rho + r + n l)] = 0,$$

whence

$$\rho + r + n l = 2 n l;$$

that is,

$$\rho + r = n l;$$

or the greatest heat is generated in the resistances when the value of the latter equals the resistances of the rest of the circuit.

Let us now assume the n resistances to be connected up in multiple arc; then the joint resistance will become $\frac{l}{n}$, and the heat generated will be

$$H'' = \frac{E^2 \frac{l}{n}}{\left(\rho + r + \frac{l}{n}\right)^2} \quad . \quad . \quad . \quad (4)$$

and the maximum amount of heat will occur, as before, when

$$\rho + r = \frac{l}{n}.$$

Now, in the first case, if the internal resistance of the battery and of the connecting wires be very small compared with $n\,l$, we may neglect them; so that by putting $\rho + r = 0$, equation (3) becomes

$$H' = \frac{E^2}{n\,l};$$

or the total amount of heat generated in the resistances will vary inversely as the number of the latter in circuit.

In the second case, we cannot neglect $\rho + r$; for here the greater we make n, the smaller $\frac{l}{n}$ becomes with respect to $\rho + r$; so that if eventually $\frac{l}{n}$ becomes very small, we may neglect it in the denominator of the fraction. Then

$$H'' = \frac{E^2 \frac{l}{n}}{(\rho + r)^2} = \frac{E^2 l}{n(\rho + r)^2} \quad . \quad . \quad (5)$$

so that in this case also the total heat generated in the resistances will vary inversely as the number of the latter in circuit.

Now, it must be observed that in each of these cases the total heat is distributed over n resistances; and, therefore, as compared with one resistance, the heat generated in each is only $\frac{1}{n^2}$ of that generated in one. So that, joined up either in series or in multiple arc, the heat generated in each of a number of resistances varies inversely as the square of their number.

With respect to the light emitted, if the amount of heat generated represented exactly the amount of light emitted, then the above equations would indicate the effects produced by multiplying the lights or subdividing the current when a constant battery is employed. But this is not so. The light obtained is not proportional to the heat generated. Below a certain limit the production of heat is not accompanied by light at all. In the case of incandescence, if the heat be

distributed over two wires instead of one, inasmuch as the mass to be heated in the one case is double that in the other, the actual temperature to which each of the wires will be heated will be only one quarter of that obtained with one wire, and the total light emitted will be half what it was before. In the case of the arc a similar result probably takes place; the incandescent matter, which is heated by the current and which gives out the light, is increased by the addition of each lamp, and therefore diminishes the actual temperature of each arc, and consequently diminishes the light given out in direct proportion to the number of lights.

Moreover, in the arc the actual disintegration of the carbons, and the transference of matter across the air-space, represent an amount of work done which must be deducted from that converted into heat, and which again tends to diminish the amount of light emitted. If, therefore, the lamps be joined up in series or in multiple arc, the light emitted by each lamp will vary inversely in a greater ratio than the square of the number in circuit.

We have assumed E to be constant; but if the current be produced by a magneto or dynamo-machine worked by a steam engine consuming a given amount of coal per unit time, E is no longer constant, for it varies with the resistances in the circuit. The constant in this case is the work done in the steam engine in unit time. Calling this W_1, the total heat generated in the circuit when the lamps are joined up in series will be:

$$H_1 = W_1 \times \frac{n\,l}{\rho + r + n\,l} \quad . \quad . \quad . \quad (6)$$

and since the light varies inversely as n, the light emitted

$$L_1 = W_1 \times \frac{n\,l}{n(\rho + r + n\,l} \quad . \quad . \quad . \quad (7)$$

and when joined up in multiple arc,

$$L_2 = W_1 \times \frac{\frac{l}{n}}{n\left(\rho + r \times \frac{l}{n}\right)} \quad . \quad . \quad . \quad (8)$$

Or by putting $\rho + r = 0$ in equation (7), and $\frac{l}{n} = 0$ in the denominator of equation (8), we get

$$L_1 = \frac{W_1}{n}$$

and

$$L_2 = \frac{W_1 l}{(\rho + r) n^2}.$$

So that beyond certain limits, when the current is produced by a dynamo-machine, if n lamps be joined up in series, the total light becomes diminished by $\frac{l}{n}$, and the light emitted by each lamp becomes diminished by $\frac{1}{n^2}$.

If they are joined up in multiple arc, the total light is diminished by $\frac{1}{n^2}$, and the light emitted by each lamp $\frac{1}{n^3}$. In the latter case the rapid diminution in the light emitted is due to the fact that the heat is developed in the machine itself, instead of in the resistances external to it.

We have assumed W_1 to be constant; but this is only the case when a certain limit is reached, and when the velocity of the rotating coils in the dynamo-machine has attained a maximum. This limit will vary with each dynamo-machine and each kind of lamp used. With the Wallace-Farmer machine the limit appears to be reached when six lamps are connected up in series; with the Gramme alternating machine and Jablochkoff candles, the limit appears to be five lamps. Beyond these limits the above laws will be true. It is this partial success in multiplying the light that has led so many sanguine experimenters to anticipate the ultimate possibility of its extensive subdivision—a possibility which this demonstration shows to be hopeless, and which experiment has proved to be fallacious.*

In the reduction of results, the following equational numbers will be found of use:—

1 standard candle = $\frac{1}{3}$ cubic foot of gas per hour.

* Vide p. 62.

1 cubic foot of coal gas = 690 heat units (lbs. water heated 1° Fahrenheit).

The Franklin Institute experiments gave 380 candles = 1 h.-p. force expended. Thirty-eight per cent. of total power in the circuit appeared in the arc.

1 h.-p. = 1,980,000 foot-pounds per hour.

1 heat unit = 772 foot-pounds = 0·252 calorie.

Therefore, 1 h.-p. = 2565 units of heat per hour, and $\frac{2565}{380} = 6\frac{3}{4}$ units of heat per candle of light.

1 lb. gas coal produces 4 cubic feet of gas, 0·85 lb. gas coke, and 0·05 lb. gas tar. In the pound of gas coal there are 15,000 units of heat; in the coke 13,000, and in the ~~gas tar~~ gasoline ~~20,000~~, units of heat.

2 000.

The power expended by a dynamo-machine producing the light of one sperm candle is about equivalent to 90 lbs. falling through one foot in one minute.

1 foot-pound = 0·1380 kilogrammètre.

1 calorie (kilogramme of water heated 1° Centrigrade) = 424 kilogrammètres = 3·9683 heat units (Fahrenheit).

1 kilogrammètre = 7·2331 foot-pounds.

CHAPTER VIII.

ELECTRIC REGULATORS.

THE term "regulator," derived from the French term *regulateur*, has been very generally applied to the apparatus we have described as electric lamps. The term arose from the regulating mechanism employed in these lamps to maintain a due distance between the carbon points.

We have reserved the term "regulator" to be applied to the apparatus devised for the maintenance of a constant strength of current in any electrical circuit. In all applications of electricity to lighting purposes, it is of the greatest importance that the strength of current in any of the circuits should be maintained uniform, so that the adjacent circuits in connection from the same source may not receive too much nor too little current.

Jacobi appears to have devised the first electric regulator. It consisted of a magnetized needle, pivoted, and surrounded by a coil of wire, so arranged in connection with a trough of liquid that increase in the deflection of the needle produced by the current, introduced a greater length of liquid into the circuit. This regulator was impracticable, on account of the variations introduced by polarizations of the electrodes dipping into the liquid, and is evidently inapplicable to such enormous currents as occur in the circuit of a dynamo-electric machine.

Staite and Edwards, those really wonderful electricians, who were so much in advance of their time in their electrical inventions, have patented several forms of electric regulators, in which the height of a column of mercury is regulated by the greater or less suction exerted by a magnetic bobbin upon

an iron float or piston, the mercury being included in the circuit between one end of the bobbin and a long platinum electrode dipping into the other end of the mercurial column.

In another form, the expansion of a platinum wire caused the movement of a lever having something like hyperbolic curvature. This lever worked upon a helix of insulated wire, bared in a line parallel to the axis of the helix, where the lever touched; so that the greater the expansion of the platinum wire, the more the lever was raised and the larger the number of turns of wire introduced into the circuit, and *vice versâ.*

This idea, as well as that of the lamp by the same inventors, introduced to-day, would be even now considered as applications of the highest order in physical science. Considering that these inventions are more than twenty years old, certain objectors to the fact of progress in the application of electrical laws have at least some ground for what they advance.

Lontin appears to have been the first to make practical application of the expansion of metals under the heat generated in them by the passage of the current. He passed the current through the double metallic band of a Breguet or metal thermometer, one end of which was fixed, and the other attached to a helix of wire, the convolutions of which it short-circuited when the current was weakened. This regulator was sluggish in its action, because the short-circuiting took place by the movement or pressure of the coils of the helix upon each other laterally to the axis of the wire, and directly with respect to the axis of the helix.

It has been pointed out that the essential principle of all good governors, whether of steam engines or electric currents, is that the slightest change in the thing to be controlled produces considerable variation in the supply of energy.

The idea of employing the stretching of a wire by the heating of the current passing through it was also suggested by the early contrivers of electric lamps as a simple means of regulating the distance between the carbons, and it has the advantage that, as the heat produced per second is proportional to the square of the current flowing through it, a very

slight change in the current will produce a considerable variation in the quantity of heat produced per second, and therefore in the temperature, if the mass of the substance to be heated is very small. On the other hand, when the current diminishes in strength, it is necessary that the temperature of the heated substance should immediately fall; this requires considerable radiating surface. These conditions Dr. Siemens has attempted to fulfil in the following instrument (Fig. 86).

FIG. 86.

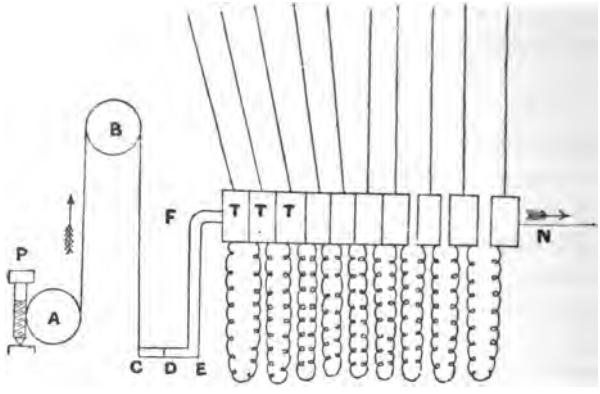

A B C is a vertical band of metal not more that two-thousandths of an inch thick, passing over the roller B, one end of the band being fixed to the roller A, and the other, C, to the short end of a lever, C D E F, turning on a pivot, D. When by turning the pinion P the thin metallic band is tightened, the upper end, F, of the lever C D E F is pressed against the movable metallic terminals, T, of the resistance coils, the result is these are pushed out of the vertical and pressed together, and all the coils are short-circuited. If now a current, entering at A and leaving at N, passes through the vertical metallic strip A B C, the lever C D E F, and the terminals T T T, it heats the strip, which consequently expands and diminishes the pressure of F on T; some of the terminals, therefore, separate from one another, and some of the resistance coils are introduced into circuit. In the figure six are shown short-

circuited and three in circuit. Resistance will be thus automatically introduced. To provide against accidental changes in the radiating power of the strip, produced by currents of air, the portion A B C is placed under a glass cover. In some trials made with this instrument before the Royal Society, it was shown that the interposition of a certain resistance into the circuit only altered the deflection of a tangent galvanometer from 40° to 39·5° when the regulator was employed, whereas without it the insertion of the same extraneous resistance diminished the deflection from 60° to 40°.

Fig. 87.

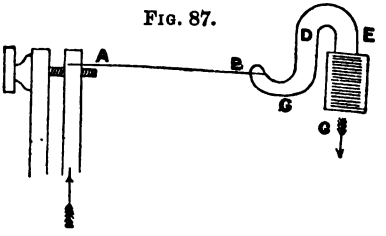

Fig. 87 is another form of governor proposed by Dr. Siemens. The wire A B is stretched until the lever C D E, turning on the pivot D, produces sufficient pressure on a pile of Edison carbon-discs in the glass tube G. This pressure becomes less, and the resistance of the carbons becomes greater, the more the wire stretches by heating with the current passing through it and through the carbon discs; the stronger, therefore, the current, the greater is the resistance opposed to it, and equilibrium is maintained.

The principle of this apparatus has been described by the inventor in a paper read before the Royal Society, January 30, 1879:—

"It is well known that when an electric current passes through a conductor, heat is generated, which, according to Joule, is proportionate in amount to the resistance of the conductor, and to the square of the current which passes through it in a unit of time, or $H = C^2 R$. The most essential part of the instrument is a strip of copper, iron, or other metal, rolled extremely thin, through which the current to be regulated has to pass as described. Suppose that the current intended to be passed through the instrument is capable of maintaining the sensitive strip at a temperature of say 60° C., and that a sudden increase of current takes place in consequence either

of an augmentation of the supply of electricity or of a change in the extraneous resistance to be overcome. The result will be an augmentation of temperature, which will continue until a new equilibrium between the heat supplied and that lost by radiation is effected. If the strip is made of metal of high conductivity, such as copper or silver, and is rolled down to a thickness not exceeding 0·06 millimètres, its capacity for heat is exceedingly small, and, its surface being relatively very great, the new equilibrium between the supply of heat and its loss by radiation is effected almost instantaneously. But, with the increase of temperature, the position of the regulating lever is simultaneously affected, causing one or more contacts to be liberated, and as many additional resistance coils to be thrown into circuit; the result being that the temperature of the strip varies only between very narrow limits, and that the current itself is rendered very uniform, notwithstanding considerable variation in its force, or in the resistance of the lamp, or other extraneous resistance which it is intended to regulate.

"It might appear at first sight that, in dealing with powerful currents, the breaking of contacts would cause serious inconvenience, in consequence of the discharge of extra current between the points of contact. But no such discharges of any importance actually take place, because the metallic continuity of the circuit is never broken, and each contact serves only to diminish to some extent the resistance of the regulating rheostat. The resistance coils, by which adjoining contact-springs are connected, may be readily changed, so as to suit particular cases; they are made, by preference, of naked wire, in order to expose the entire surface to the cooling action of the atmosphere.

"The apparatus first described may be adapted also for the measurement of powerful electric currents. The variable rheostat is in this case dispensed with, and the lever carries at its end a pencil, pressing with its point upon a strip of paper drawn under it, in a parallel direction with the lever, by means of clockwork. A second fixed pencil draws a second or datum line upon the strip, so adjusted that the lines drawn by the two pencils coincide when no current is passing through the

sensitive strip. The passage of a current through the strip immediately causes the pencil attached to the lever to move away from the datum line, and the distance between the two lines represents the temperature of the strip. This temperature depends, in the first place, upon the amount of current passing through the strip, and in the second place, upon the loss of heat by radiation from the strip, which two quantities balance one another during any interval that the current remains constant.

"If C is the current before increase of temperature has taken place, R the resistance of the conductor at the external temperature T, H the heat generated per unit of time at the commencement of the flow, R′ the resistance and H′ the heat when the temperature T′ and the current C have been attained; then, by the law of Joule, $H' = R' C'^2$. But, inasmuch as the radiation during the interval of constant current and temperature is equal to the supply of heat during the same interval, we have, by the law of Dulong and Petit, $H' = (T' - T) S$, in which S is the radiating surface. Then $R' C'^2 = (T' - T) S$, $C'^2 = (T' - T) \frac{S}{R'}$. But $T' - T$ represents the expansion of the strip or movement of the pencil *m*, and considering that the electrical resistance of the conductor varies as its absolute temperature (which, upon the Centigrade scale, is 274° below the zero Centigrade) according to a law first expressed by Helmholtz, and that we are only here dealing with a few degrees' difference of temperature, no sensible error will be committed in putting the value of R for R′, and we have the condition of equilibrium $C^2 = m \frac{S}{R}$.

$$\therefore C' = \sqrt{m \frac{S}{R}} \quad . \quad . \quad . \quad . \quad (1)$$

or, in words, the current varies as the square root of the difference of temperature or ordinates. For any other condition of temperature T″ we have $C''^2 = \frac{S}{R} (T'' - T)$.

$$\therefore C'' = \sqrt{\frac{S}{R} (T'' - T)},$$

and $(C''^2 - C'^2) = (T'' - T - T' \times T) \frac{S}{R} = (T'' - T') \frac{S}{R}$; but for small differences of C″ and C′ we may put $(C''^2 - C'^2) = 2\,C''\,(C'' - C')$; that is to say, small variations of current will be proportional to the variation in the temperature of the strip.

"In order to facilitate the process of determining the value of a diagram in webers or other units of current, it is only necessary, if the variations are not excessive, to average the ordinates, and to determine their value by equation (1), or from a table prepared for that purpose. The error committed in taking the average ordinate instead of the absolute ordinates

Fig. 88.

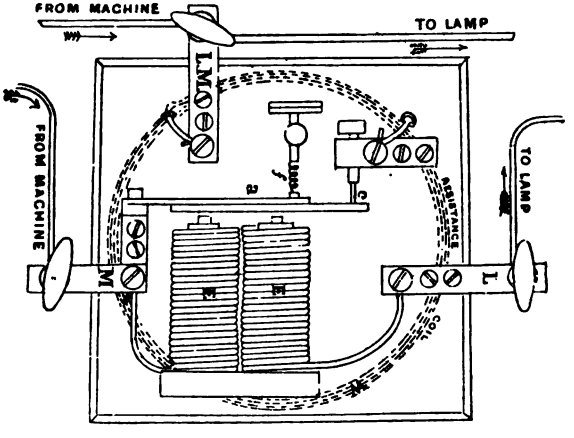

when the current varies between small limits, is evidently small, the variation of the ordinates above their mean value averaging the variations below the same.

"The thin sensitive conductor may thus be utilized either to restrict the amount of electricity flowing through a branch circuit, within certain narrow limits, or to produce a record of the amount of current passed through a circuit in any given time."

An example of another form of regulator is shown in Fig. 88. This apparatus, issued with the Siemens machine, is intended to introduce into the circuit a resistance equal to

that of the lamp, should the latter be extinguished. It consists of a resistance coil, W, equal to the arc in value, immersed in water in a small tank formed in the base plate. An electromagnet, E, when the current is passing, attracts an armature, *a*; when no current is circulating in the coils of the electromagnet, a spring, *f*, draws the armature against a contact-piece, *c*. Under the normal conditions of the action of the lamp, the magnet draws the armature away from the contact-piece; when the current ceases, the spring returns the armature to the stop completing circuit through the coil of resistance, W. The resistance of the circuit is by this means maintained sufficiently constant to prevent racing of the motor, and influence upon other lights in circuit. The apparatus does not appear to be much used in practice.

A somewhat similar device has been described as existing in the base of the Rapieff lamp.

CHAPTER IX.

COMMERCIAL ASPECT OF ELECTRIC LIGHTING.

THE success of the electric light from a commercial point of view infers that not only must the system of lighting be practicable, but it must as well be practicable with economy. It must be produced cheaper than existing lighting, or its greater expense must be balanced by other advantages. In estimating the true commercial position of the electric system of lighting, the estimator is in a position of great difficulty. He is called upon, in some instances, to form an opinion based upon public exhibitions of one peculiar system, because with other systems the trials have not taken place upon a similarly extensive scale. This system is acknowledged to be the most costly mode of lighting by electricity, yet has been most adopted, partly, we may suppose, from want of energy of the supporters of other systems, and a certain regard for first cost. Numerous reports have been published as to the advantages and disadvantages of electric lighting. Dismissing those most strongly biased against—describing the electric light as "artificial," and predicting its speedy extinction—and accepting the details given by manufacturers with every reserve, the conclusion most likely to occur to the investigator who is merely seeking a superior system of illumination is, that the conditions under which the electric light has been produced are so variable as to render an *ipse dixit* impossible. Its commercial practicability is, in fact, entirely dependent upon circumstances.

It is required to light a large space, with no partitions or subdivisions; then, under any circumstances, electric

lighting is cheaper than gas lighting, and the cost will vary from one-half to one-twentieth of the latter system. For divided spaces of certain dimensions, as stores, shops, and manufactories of a general character, the economy of lighting by electricity will depend upon the power of the light required. Where a 20-candle burner is sufficient in a single apartment, gas lighting is the cheaper system; but where 100 candle-power is required, advantages are as much more in favour of electric lighting.

Special manufactures and trades in which an equivalent to daylight is necessary to distinguish colours, as in silk-mills, drapers' shops, dyers' establishments, colour works, determine other conditions, and the electric light has then no competitor. It is a substitute for daylight, and enables the manufacturer to double his hours of work, or to work continuously, thereby doubling his production with the same plant. Upon this special basis, no other system of lighting can compete with electric lighting. For theatrical and other displays, there is again a wide and special field.

For street lighting, it may be considered that the question has still to be solved. Only a special system has been adopted either in Paris or in London, and this system has, in comparison with other systems, given results that may be regarded as unfavourable to electric lighting. It is, however, much to be deplored that so numerous corporate bodies have not taken the advice of independent electricians, and placed the various systems proposed for public lighting under more direct competitive trial.

Every one knows that the monetary interests connected with gas lighting are very great and highly important, and that a very large portion of the investing public, who have taken shares in companies supplying gas, would be more inconvenienced by depreciation of their property than they would gain by the immediate introduction of a superior system of lighting. Hence there is considerably more direct sympathy with existing systems of lighting than with the introduction of novel systems, that might depreciate the value of present property, and not themselves, consequently, offer so profitable

an investment. Besides this, public opinion is vastly conservative, as well as prone to exaggerate probabilities. Not very many years ago, the introduction of railways was thought likely to end in the extermination of the horse. Railways and cornfields could not co-exist. The sellers of oil protested against the introduction of gas, as strongly as the sellers of gas protest against the electric light. Gas was unhealthy, dangerous; it would undermine and blow up London; it was the idea of a madman, and could never be forced through a mile of tubes. It is needless to say that more horses exist now than in the palmiest days of coaching; our rail tracks pass through the most magnificent fields of corn; more oil is sold than ever was produced; that the mileage of piping conveying gas through London is counted by the thousands, and that, chimerical and dangerous as gas lighting ever appeared, the system has met with universal adoption.

It is quoted against electric lighting that, although it has been known for more than 30 years, it has not been adopted generally. The manufacture of gas was known in the laboratory for a much longer period prior to its introduction, and lighting by natural gas actually existed in several foreign countries more than 200 years before its artificial adoption.

That electric lighting has not progressed will be proved untrue by comparing the following cost in 1857 in France, then the centre of chemical science, with subsequent statements. The lamp, one of Lacassagne and Thiers, was fed by 60 Bunsen cells, and was worked for 100 hours:—

Substance.	Consumption in 100 hours.	Cost per hour.	Actual Cost.
Zinc	72·00 kilos.	0·75 francs.	80 francs per 100 kilos.
Sulphuric acid ...	154·00 „	0·37 „	12 „ „
Nitric „ ...	247·00 „	1·73 „	56 „ „
Mercury ...	9·50 „	0·50 „	650 „ „
Purified carbon ...	6·61 mètres.	0·20 „	2·5 „ „
Total ...	... ...	3·55 „	

M. Becquerel had previously determined the cost to be three francs per hour.

Le Roux has prepared the following estimate of the cost of working an Alliance machine, producing 1000 candle-power light, for five hours daily:—

With special motor:

	Francs.
Interest at 10 per cent. upon 12,000 francs, first cost	3·35
Coal, 50 kilos. at 40 francs	2·00
Stoker	5·00
Carbons	1·80
Oil and sundries	0·70
Cost per day	12·85

The motor used for other purposes:

	Francs.
Interest on 9000 francs at 10 per cent.	2·50
Coal, 20 kilos.	0.80
Carbons	1·80
Oil and sundries	0·40
Cost per day	5·50

With 500 hours' lighting a year, the cost is 4·30 francs and 3·0 francs per hour respectively.

M. Fontaine deduces the cost of lighting with the Gramme machine to the end of the year 1877, and shows that to this date the Gramme machine yields a light

75	times	less	expensive	than that from wax candles.
55	"	"	"	stearine candles.
16	"	"	"	colza oil.
11	"	"	"	gas at 0·30 franc per cubic mètre.
6½	"	"	"	gas at 0·15 franc " "

Under the most favourable conditions, this light is

300	times	less	expensive	than that from wax candles.
220	"	"	"	stearine candles.
63	"	"	"	colza oil.
40	"	"	"	gas at 0·30 franc per cubic mètre.
22	"	"	"	gas at 0·15 franc " "

M. Fontaine also gives the following tabulated comparison of cost of various lights:—

	Quantity burnt per hour.	Cost per burner * per hour.	Cost for 4000 burners per hour.	Observations.
	grammes.	francs.	francs.	
Purified colza oil ...	42	0·07	28·00	Price per kilog. 1·70 francs.
Neutral Allaire oil	39	0·06	24·00	" " 1·55 "
Shale oil	36	0·0468	18·72	" " 1·30 "
Petroleum oil ...	30	0·054	21·60	" " 1·80 "
Tallow candle ...	83	0·141	56·40	" " 1·70 "
Wax candle ...	66	0·33	132·00	" " 5·0 "
Stearine candle ...	82	0·246	98·40	" " 3·0 "
Voltaic battery ...	"	0·06	24·00	
"Alliance" machine	"	0·024	9·00	For 500 hours per year.
"Alliance" machine	"	0·007	2·80	For 4000 hours per year.
	litres.			
Oil gas	140	0·029	11·60	At 0·15 franc per cubic mètre : 500 hours per yard.
Oil gas	"	0·025	10·00	At 0·15 franc per cubic mètre : 4000 hours per yard.
Oil gas	"	0·050	20·00	At 0·30 franc per cubic mètre : 500 hours per year.
Oil gas	"	0·046	17·80	At 0·30 franc per cubic mètre : 4000 hours per year.
Gramme machine (new type)	—	0·0042	1·78	With steam motor : 500 hours per year.
Gramme machine (new type	—	0·0016	0·56	With steam motor : 4000 hours per year.
Gramme machine (new type)	—	0·004	1·60	With hydraulic power : 500 hours per year.
Gramme machine (new type)	—	0·0011	0·44	With hydraulic power : 4000 hours per year.

Considerable reduction has, however, been made in the cost of electric lighting since these comparatively experimental introductions, and the subsequently quoted costs are those of the present day (1879).

The Northern of France Railway Company introduced the electric light at the goods station of La Chapelle, Paris. The electric sources were six single-light Gramme machines, driven by one 15 nominal h.-p. engine. The work had a nightly duration of an average of ten hours. The first cost of £1640 comprised six lamps, six machines, portable engine with its shed or house, and conductors. In the goods shed, each light illuminated well a radius of 100 feet, and in the yard a radius of 200 feet. The results showed that about 2¼ h.-p. per hour was required for each light, and that for each lamp

* A burner may be accepted as equal to 8–9 normal candle-power in each case.

three-eighths of an inch square carbons were consumed at the rate of four inches per hour, at a cost of 1½*d.*, including waste.

Four lights, on an average, for ten hours per night, were found to cost—

	s.	*d.*
Motive power, 2½ h.-p., 7·8 lbs. coals, ten hours, each lamp	7	0
Carbons, ten hours at 1½*d.*, each lamp	4	10
Oil, 8*d.*; wood, 1½*d.*; lighting engine-house, 2½*d.* ...	1	0
Engineer	4	0
	16	10

or 5*d.* per hour; to which must be added 10 per cent. interest and depreciation on first cost, bringing the total to 7¾*d.* per hour. This represented an actual light of 52 gas-jets, at a cost of 22 gas-jets.

In 1876 Messrs. Powell, of Rouen, introduced the electric light into the engineers' shop, a building 125 feet long, 45 feet broad, 40 feet high at the ridge, and 26 feet high at the eaves. Two Gramme single-circuit machines, with Serrin lamps and conductors, cost £196. The motive power was taken from the working engine, and 2½ indicated h.-p. was required by each light, having a horizontal intensity of 1900 candles. The actual cost of this illumination is 4*d.* per hour per light, and, assuming a special engine, the total cost would be 2*s.* 10*d.* per hour. The cost of gas in Rouen is 7*s.* 8*d.* per 1000 cubic feet, and an equivalent light by gas would cost 7*s.* 7*d.* per hour. The light has constantly been in use, and is in course of extension throughout the works.

"For some months the electric light has been on trial in a large engineering works in the North. The department in which the electric lights are used is 170 feet long by 45 feet broad. Two Gramme machines were used, each machine being of 6000 candle-power, with two Serrin lamps.

	£	*s.*	*d.*
Two Gramme machines, 6000 candle-power each, at £100 each	200	0	0
Two Serrin lamps, at £18 each	36	0	0
100 mètres of cable, at 2*s.* 9*d.* per mètre ...	13	15	0
40 mètres of carbons, at 2*s.* 6*d.* „ ...	5	0	0
Net cost	254	15	0

"A two-cylinder engine was fitted up expressly to drive the two machines; the diameter of the cylinders, 5½ inches by 10 inches stroke; mean pressure, at least 30 lbs.; revolutions 200 per minute. At this piston speed it was estimated that fully 8 indicated horse-power could be obtained. On setting up the electric machines, it was found they could not be got up to the speed necessary to produce a full light. It was seen that there was not power enough; besides, by the two machines being driven off the one engine, the light obtained at each lamp was very fluctuating, this arising in a measure from either lamp carbons sometimes splitting off; and as a consequence the engine ran faster, driving the other machine at an increased rate and increasing its brilliancy. On ignition taking place again the engine speed fell. Alternations such as these, together with a limited brilliancy of light, led to the determination to drive one machine with the engine solely, and the other off one of the works engines. This was done, and now the lights in each lamp are working steadily and satisfactorily. From the experience acquired, it is concluded that it requires, at least, 1 horse-power for every 1000 candle-power; also, that each machine should be driven independently, the whole of the necessary driving gear being and costing as follows:—

	£	s.	d.
Engine for driving one 6000 candle-power Gramme machine, cylinders 5½ inches by 10 inches stroke	40	0	0
Piping	1	10	0
Countershaft, pulleys, and belts	6	15	0
Labour fitting up wires, lamps, and machines ...	2	10	0
	50	15	0
Two machines	101	10	0
Cost of machines, lamps, cables, and carbons ...	254	15	0
Total net cost	356	5	0

"In order to arrive at the comparative cost of the electric and gas lights, the data are as follows, taking the cost of the electric light per diem of four hours—two in the afternoon

and two in the morning—this being the actual time it is in use :—

	s.	d.
In four hours both lamps burn half a mètre of carbons, which at 2s. 6d. per mètre is	1	3
Coals consumed by engines in four hours, at 3½ lbs. per indicated horse-power, 2 cwt.	1	0
Oil consumed by engines and shaft in four hours ...	0	2
	2	5

Or equal to 7¼*d.* per hour. The actual gaslights dispensed with are 22 on columns and 8 on machines, giving a total of 30 burners. Each burner uses, in the four hours, 13 cubic feet of gas, or 390 feet in all, which costs 11¾*d.*, or nearly 3*d.* per hour. The quantity of gas consumed in the department is ascertained from total daily amount used as per gas meter, and is pretty accurate in the rate used per burner during four hours."

This report, taken from an engineering paper, is illustrative of one of the worst applications of electric lighting, as so far calculated, because no account is taken of the increased light obtained, nor could this light have been properly distributed. In Messrs. Sautter and Lemonnier's workshops in Paris, the electric light has been continuously employed, and the illustration on the next page will give some idea of its effect, there being no other lamps or candles used, as in the case just quoted.

In a trial of the Farmer-Wallace light at the Southampton Docks, the places selected were the large export shed used by the Peninsular and Oriental steamers, about 340 feet long and 180 feet wide, and the corner of the quay from which the Havre and Channel Islands boats start. The Anglo-American Light Company, of Hatton Garden, supplied the machine and four lamps, the machine being worked by an 8 h.-p. engine. This engine had 9¾ inch cylinders and 12 inch stroke; the boiler, a total heating surface of 165 square feet, and grate area of 5·9 square feet. The speed maintained was 125 revolutions per minute, increased by pulleys and belting to 650 revolutions on the machine. Three lamps were placed in the shed, and the fourth at a point on the quay distant 420 feet from the

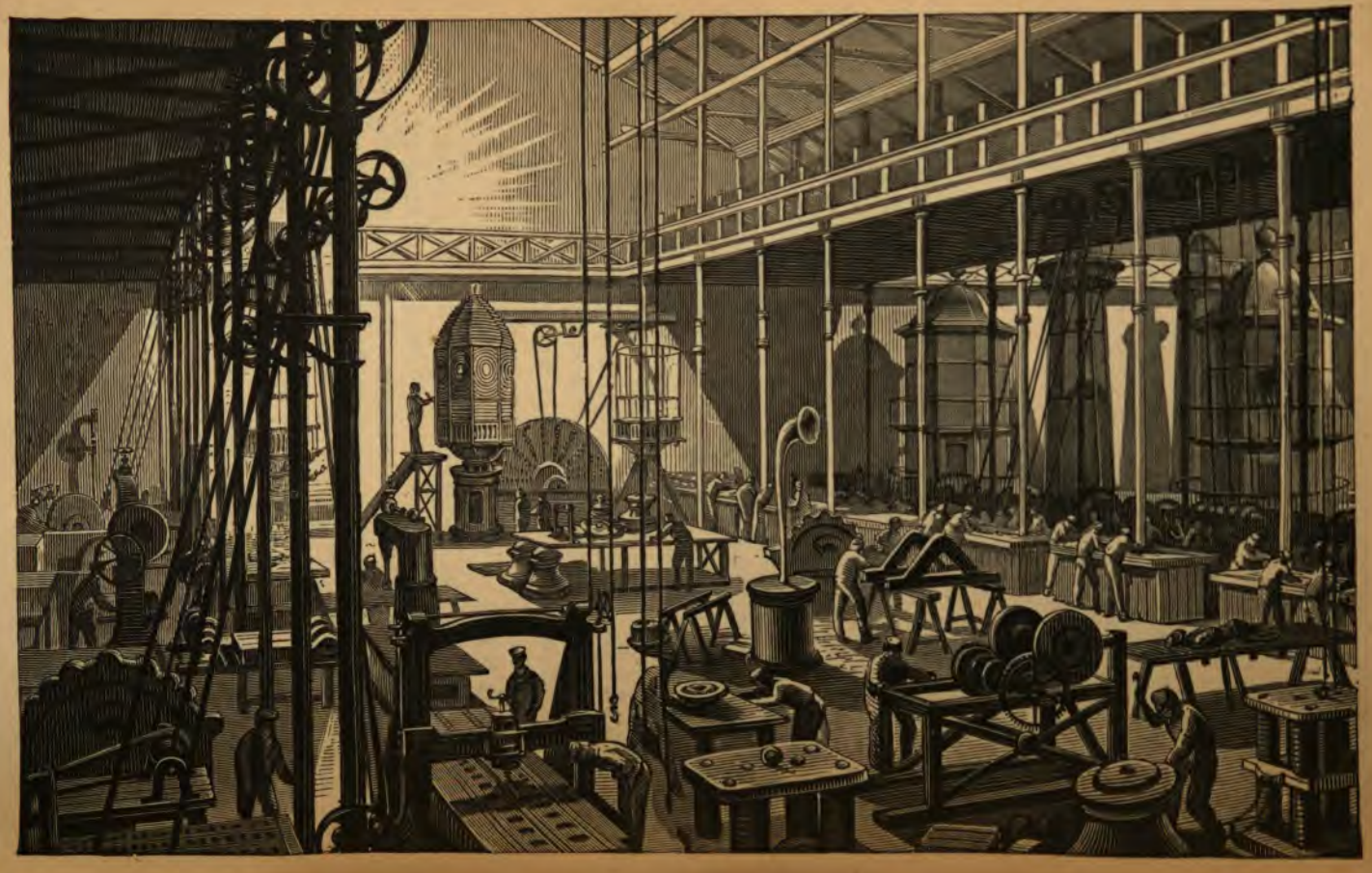

machine. The whole area of the shed, 27,000 square feet, was brilliantly illuminated in spite of an asphalte floor and blackened roof. The light at the corner of the quay was mounted on an ordinary lamp-post, and had above it a four-foot reflector. Although so close to the ground, the lamp brilliantly illumined a radius of 250 to 300 yards. The cost of the trial has not been given.

The Lontin system has had an extended trial on the Paris terminus of the Paris, Lyons, and Mediterranean Railway Company. Twenty-eight electric lights here replace 172 gas-jets, and are supplied by one generating and two distributing machines upon the Lontin system, the distributing machines being known as those of 18,000 candle-power. The average cost per hour of the 28 lamps is about 8*s*. Twelve lamps have, on the same station, been found to cost 5*d*. per hour per light, the light from each lamp averaging about 1800 candles.

At the St. Lazare station of the Western of France Railway, at Paris, six lights are maintained from a 12,000 candle-power machine on the Lontin system, the motor being an agricultural engine with 9½ inch cylinder and 13⅛ inch stroke, with a working pressure of 80 lbs. per square inch. The lights are of 480 candles each, and are not covered with any shade. This arrangement has not the least inconvenient effect upon the eye. Serrin's lamps, as improved by Lontin, are employed, there being two in each of the three circuits. The cost of the carbons per hour is 1½*d*. per light, and the working cost of the six lights:—

	s.	*d.*
Coal, at 32*s*. per ton	1	2
Carbons	0	8
Attendance	0	10
Per hour	2	8

or 5½*d*. per light. Interest and depreciation on first cost will bring the amount to 8*d*. per light per hour.

Amongst numerous other municipal authorities, the Town Council of Liverpool requested their engineer, Mr. George

Deacon, to report on the subject. Mr. Deacon visited Paris and investigated the comparative cost.

"Regulators," reports Mr. Deacon, "supplied with electricity by dynamo-electric machines, driven by steam or other motive power, have been extensively used within the last ten years for lighthouses, for naval and military signalling, for tidal and other engineering works, and in certain industrial establishments, and upon the efficiency of such combinations most of the statements laid before the public up to a recent date, as to the relative cost of electric lighting and gas lighting, have been based. Perfectly true though those statements have been, the inferences to which they have led have been most misleading.

"It is true, for example, that the cost of light from ordinary regulators having nominal illuminating powers of from 6000 to 15,000 candles is, according to circumstances, only from one-fifth to one-half the cost of gas producing the same candle-power; but in the case of the electric light a greatly increased candle-power is indispensable to produce the same degree of illumination, as the following considerations will show.

"The light from each regulator cannot be efficiently reduced below 1000 candles, and gives a much higher efficiency when increased to 10,000 or 15,000 candles. Regulators giving 6000 candles each are very commonly used. The most favourable place for the employment of such a regulator would be the centre of a circular space. If such a space were 500 feet in diameter, the light in the centre line of a circular carriage-way just within it would be greater than that in a Liverpool street illuminated in the ordinary way. To illuminate the whole area with gas rather better than the electric light would illuminate the centre of the supposed carriage-way, would necessitate the use of only about 125 Liverpool street lamps of 16 candle-power each. Thus, with gaslight having an aggregate power of only 2000 candles, a better effect is produced than with the electric light having a power of 6000 candles, even in a case particularly well adapted to give the best result attainable from a concentrated light. It is

obvious, therefore, that any comparison of cost based merely upon the relative candle-power of electric and gas lights must be misleading, and yet upon this principle many of the published comparative statements have been based.

"From the above considerations it is evident that if the illuminating power of each electric light could be greatly reduced without increasing the relative cost, the total expense of illumination by electricity would be much less than that of illumination by gas. It is natural, therefore, that the subject should have attracted the attention of many inventors, though, owing to certain dynamical obstacles, the eminent men who have made electricity a subject for mathematical research have not generally regarded the economical subdivision of the electric light as a promising matter for experimental investigation."

Mr. Deacon's observations on the cost of the Jablochkoff candle are important, and, as we shall presently see, have been confirmed by other investigators. He found by photometric experiments that each naked Jablochkoff candle gave a light, in the horizontal plane passing through the voltaic arc, of 453 standard English candles, on the average, "when the electric candle is placed with its side to the photometer; when placed with its edge to the photometer the light was somewhat less. In this average the occasional very large diminutions of intensity, lasting for short periods, are not included." . . . "But it must not be forgotten that it is thought necessary to inclose the candles in opal globes, and, though there can be no doubt that this greatly adds to the beauty of the light, it seriously detracts from its available power."

Mr. Deacon finds by photometric observations that only 42 per cent. of the light from an electric candle having an illuminating power of 453 standard candles is transmitted in a horizontal direction through the globe, thus reducing the available light from each lamp to 172 candles.

Very various statements have been made from time to time with regard to the candle-power of the Jablochkoff system, and they may be tabulated as follows:—

Illuminating power of	Standard candles.
Naked Jablochkoff candle, as given by the promoters	930
Stated by Mr. Deacon as given by the Société Générale d'Électricité	465
Determined by Mr. Deacon's photometric observations in horizontal plane	453
M. Allard's measurements in horizontal plane, conducted on behalf of the Municipal Council of Paris	279
Side of Jablochkoff candle enclosed in opal globe, as determined by Mr. Deacon in horizontal plane ...	172
Determined by M. Allard in horizontal plane ...	167·4
Determined by M. Allard for rays reaching the pavement	112·53

Continuing Mr. Deacon's observations, it is necessary to notice that, though Liverpool is supplied with 20-candle gas and London with only 16-candle gas, the Liverpool street lamps only burn four cubic feet per hour, while the London lamps burn five, so that the candle-power of each public lamp is 16, both in Liverpool and London.

"In considering what number of the 16-candle gas-burners employed for public lighting in Liverpool would give the same amount of light to a thoroughfare like the Avenue de l'Opéra—not including the two adjoining Places—it is necessary to calculate the amount of light along the centre line of the carriage-way, and so to arrange the gas lights that at no points shall the light be less than is produced along that line by the Jablochkoff candles. Having regard to the fact that the intensity of light varies inversely as the square of the distance from the object illuminated, the comparison is readily made, and assuming the too favourable view that the electric light along the carriage-way is equivalent to the concentrated light of 172 candles at each lamp, it is found that to illuminate it equally well would involve the use of 165 Liverpool street gas-jets, in substitution for the 32 Jablochkoff electric lights, each jet having a power of 16 candles, reduced to 14·08 candles by the glass of the lantern.* The gas lamps would be placed two feet from the

* The Liverpool street lamps are regulated to give an illuminating power

curbs and 27 feet 6 inches apart. With this arrangement the footways would be more brilliantly illuminated than with the Jablochkoff candles, and the darkest parts of the carriage-way would be equally, if not better, illuminated. The total candle-power of the electric lights is taken at 172 × 32 = 5504 standard candles, while the total power of the gas would be only 14·08 × 165 = 2323 candles, though its effect in lighting the avenue would be as great, if not greater, showing the benefit of subdivision of the light when it can be effected without increased cost.

"Including interest on the cost of the lamps, price paid for the gas and for lighting, repairs, and painting, each public lamp costs the Liverpool Corporation about 0·243*d.* per hour when in use. The comparison for equal illumination of the centre line of the carriage-way in each case would therefore be—32 Jablochkoff candles, at 7·68*d.* per hour, £1 0*s.* 6*d.*; 165 Liverpool gas-jets, at 0·243*d.* per hour, 3*s.* 4*d.*

"But such an illumination as either of these methods provides is immensely greater than has ever before been thought desirable for permanent use. To illuminate the Avenue de l'Opéra to the same extent and at the same cost per unit of area as the best lighted thoroughfares in Liverpool would involve the use of only 47 gas-jets, at a cost, as before, of 0·243*d.* each per hour.

"The total cost of lighting, according to the highest Liverpool standard, would therefore be 11·42*d.* per hour. In terms of illuminating power, therefore, the electric lighting in question costs at least six times as much as illumination with Liverpool gas, while in terms of the area lighted, without reference to the amount of light, it costs twenty-one times as much." *

Mr. Deacon determines the relative useful effect of lights of different intensities and systems by a very simple, yet

of 16 standard candles, with a consumption of four cubic feet of gas per hour, at a pressure of about $\frac{5}{10}$ inch of water, the cost of the gas being 3*s.* 6*d.* per 1000 cubic feet.

* The cost of lighting the Avenue de l'Opéra above referred to is nearly the same as the estimate published by the company for the illumination of other places, if interest on capital expended and rent of premises be taken into consideration.

accurate, method. He selects a few points furthest removed from the surrounding lamps, and adds together the candle-power of each light divided by the square of its distance from the point in question. Let c be the true candle-power of each light, and d_1 d_2 d_3 etc., be the distance in yards from any fixed point to the various lights; then $c\ (d^2_1 + d^2_2 + d^2_3 +$ etc.) $= x$, or light efficiency. In ordinary cases of lighting by gas, this efficiency number lies between 0·035 and 0·11, and at the intersections of streets often rises to 3·5 or 4. The application of this formula to an arrangement of lighting in which the spaces between the lamps are great will show how much greater must be the increase of candle-power to give the same useful effect as is secured by ordinary spacing.

Mr. Deacon considers that "any attempt to reduce the electric lighting of any thoroughfare to the standard of public lighting adopted in Liverpool, or even to twice that standard, would involve an expenditure so greatly in excess of the cost of lighting by gas to the same standard, as to be quite out of the question; but, admitting that in certain special cases it may be desirable to raise that standard considerably, it is important to consider how far the cost of lighting by electricity may be reduced. Reverting to the Avenue de l'Opéra, it is shown at page 207 that the opal globes obstructed 58 per cent. of the light. The globes are simply used for the sake of appearance, and to avoid the great intensity of the naked light; but the latter object may be attained by reducing only those rays which reach the eye when moderately near the lamp. By a modification of the globes, therefore, the efficiency of the Jablochkoff candles may be multiplied more than twice; and by the proper use of reflectors, by which the rays which would otherwise fall on buildings and pass upwards would be directed to the darker spaces between any two lights, the efficiency may be still further increased. There is also a serious loss due to the mode of subdivision adopted, the amount of which, however, is less certain, and a loss of probably 20 per cent. arises from the use of alternating currents. Unfortunately, the only lamps hitherto applied in practice, to which none of these objections apply, are the

ordinary regulators, one only being placed on each circuit, and worked by dynamo-electric machines giving currents of constant direction. Here the great loss from concentrated light, already adverted to, comes into play; but even this disadvantage is so far smaller than the aggregate of the others, that the same degree of illumination could be attained in such a thoroughfare as the Avenue de l'Opéra by about seven concentrated lights at less than half the present cost. The fact so often urged in Paris, 'that it would not be so beautiful,' must be freely admitted."

Mr. Deacon subsequently refers to the expensive nature of lighting by high tension machines, maintaining several lamps upon one circuit. In this he would appear to be mistaken, as comparison with other machines and their effects serves to show that the loss due to division of the work over multiple circuits is as great as occurs with direct tensional lighting. The actual cost of the Brush direct lights is a little less than that of the Lontin multiple system—both the cheapest of the classes they represent.

Mr. Deacon draws the following conclusions:—

"That the cost of the only system of public lighting by electricity at present in use is six times the cost of Liverpool gas producing the same degree of illumination, and twenty-one times the cost of the Liverpool gas which would, under ordinary circumstances, be consumed in the illumination of the same area.

"That the great discrepancy in the cost of public electric lighting in Paris and of public gas lighting in Liverpoo is due, in a high degree, to the fact that the agreeable effect produced by a succession of large semi-opaque globes, equally illuminated, has been regarded as the first consideration.

"That, apart altogether from the palpable loss produced by the opal globes, there are further losses of a very serious kind which are not common to some other existing methods.

"That it is obvious, from dynamical considerations, that the electric light, when subdivided, will always give a less candle-power for the same expenditure of mechanical energy than when concentrated; but, with the materials at present

available, it is impossible to say whether that loss will always be so great as to leave the concentrated light, treated in the best manner, more economical than the divided light for public illumination."

This last conclusion, which does not agree with his deductions on the experiments with the Werdermann lamp, is undoubtedly a true one to draw from the numerous and valuable facts and data, many the result of his own labours, that form the substance of Mr. Deacon's report.

Professor Oelhausen has investigated, in Germany and France, the cost of electric lighting with the Jablochkoff candle. Decided as is the purely technical progress made by Jablochkoff with his "candles," it must, in the professor's opinion, be as decidedly denied that on the score of economy, which the proportion of competition secures for gas, any progress has been made towards the earlier application of the old Gramme machines and Serrin's lamps.

The following considerations will prove that the cost of electric lighting by means of Jablochkoff's candles, ascertained in the previous year, has not been altered at all to the prejudice of gas, but rather on the contrary. This assertion is supported first by a discussion of the expenses occasioned by the lighting of different streets of Paris during the last Exhibition. The connected illumination of the Place and Avenue de l'Opéra, as well as of the Place du Théâtre Français, was formerly effected by 68 three-armed and 22 five-armed gas lamps, altogether 314 gas-jets. The price of a gas-jet in Paris is 2·1 centimes; its consumption about 130 to 140 litres an hour. Sixty electric lamps were substituted for these 314 gas-jets, for four or five hours every night; thus one electric light takes the place of 5·2 gas-jets. The town pays the Société Générale d'Électricité 1 franc 45 centimes an hour for the cost and maintenance of every jet, thirteen times the amount of the superseded gas-jets, which, taken together, cost 11 centimes an hour. The electric lanterns substituted for the five-armed gaseliers each contained a second burner, not put down in the account, inasmuch as they were not paid for by the town, but maintained gratis

by the company, which greatly increased the brightness of the Place de l'Opéra.

The extraordinarily striking contrast between the brightness of the electric light and the former gas lighting was, in fact, only noticeable where the number of the burners was thus doubled. In the Avenue de l'Opéra, where there was an electric lamp at about every 50 paces, superseding 6·2 gas-jets, the intensity of the light is about equal to that in the adjoining Rue de la Paix, where a gaselier with three gas-jets is placed at every 17 paces.

According to this arrangement, an electric lamp would take the place of only nine gas-jets, divided into three, in order to produce equal brightness in street lighting. But, if we take even 12 divided gas-jets as an equal substitute for one electric lamp—decidedly an exaggerated example—then it follows that the recent illumination in Paris absolutely and relatively, in proportion to the brilliancy produced, costs very much more than gas; for the substitute for 12 divided gas-jets, which would give equal brightness (costing, at 2·1 centimes, only 25·2 centimes an hour), one electric lamp, costs 1 franc 45 centimes, or nearly six times as much. But it will occur to no one to attribute equal economical value to that degree of brightness falling within the province of luxury, which oversteps what is necessary in street lighting.

Could the necessary light be doubled with very little increase of expense, the public would, of course, gladly accept; but if they are to pay far more in proportion for luxurious brightness, than for necessary light, then few would think of accepting it as a permanency.

The cost of 12 divided gas-jets, consuming at most 140 litres an hour, is about equal to that of one electric lamp. The latter costs 1 franc 45 centimes an hour. But the mere waste in carbons, quite apart from engine power, maintenance, service, rents, and liquidation of the capital, costs double as much as an equally intense street lighting by gas.

Professor Oelhausen prophesies from this that the electric street lighting of Paris will soon vanish, leaving as little trace as Tessié du Motay's hydro-oxygen light, introduced with

equally high estimation in 1867. The shares of the Parisian Gas Company at that time fell several hundred francs; this time they have not perceptibly altered.

The 1 franc 45 centimes which the town pays for one burner for one hour itself carries the eventual profit of the shareholder in the Jablochkoff Company.

The estimate for lighting by the Jablochkoff candle at the Paris Exhibition includes the following items:—

	Centimes.
Carbons	50
Expenses of the steam engine, 18 horse-power, for 16 burners at 2½ kilos. coal consumption an hour, coals 32 francs 8 centimes for a ton	9
Oil and sundries	2
Stoker	4
Total	65

This estimate is too low. The following must be added to this statement:—

	Centimes.
Maintenance and repairs of the dynamo-electric engines, superintendence, necessaries for lighting and working motors, service for the lamps, inspection, and changing of the burners ... ... (*This is taken from the last year's statement of account.*)	15
The service for the Jablochkoff candle, on account of the attendance required, is in every way more expensive than that of Serrin's regulators. The exact cost amounts to	95
Rent and liquidation of capital	18
	113

But it must be remarked that no rent for engine yard, no expenses of direction, management, and other sundries, enter into this statement. From private consumers the company demands higher prices; for the illumination of the Arc de Triomphe they received 30 centimes more—1 franc 75 centimes per burner per hour.

As to the illumination of interiors with the electric light, it can unquestionably, in this case, take the place of a greater

number of gas-jets than in the street. In the centre of a round or square room, the electric light is equally useful on all sides, while in the street it can never be placed in the centre of an illuminated surface, but only on the long side of a rectangle.

On the other hand, the street has this advantage, that the lamps can be placed higher—in the Avenue de l'Opéra, the candelabra for the electric light are five mètres in height—than is generally possible with interiors. But the difference that the vertical and horizontal distance makes upon the illuminated surface is very great. The small difference of two or three mètres in the point of suspension of the electric lamps necessitated the increase of their lighting power from 171 to 256, in order to illuminate a horizontal table standing three mètres to the side of the vertical line through the lamp, with equal intensity. It is chiefly to this particular that we must ascribe the fact that the electric light, in the interior of buildings, is not capable of supplying the place of that number of gas-jets which might be supposed, in comparison with street lighting, and in spite of the actually unfavourable position of the burner, in the space to be lighted. According to the application which the electric light has found in the interior of buildings, 15 is the largest number of gas-jets for which Professor Oelhausen has found one electric burner substituted. This instance is the reading-room of the Hôtel Continental. As a rule, one electric burner can be substituted for 10, or at the most 12, gas-jets. The intensity of the light is then greater than with gas. On the other hand, in the Hôtel Continental, the light was not perceptibly stronger under the centre chandelier, where two electric burners were substituted for 30 gas-jets, than under either of the two other chandeliers, which were each furnished with 30 gas-jets.

Professor Oelhausen deduces that the circumstance that there only is light required for about 500 hours per burner a year is unfavourable to the electric light for interiors, and the rent and liquidation must be spread over a much smaller number of hours than with street lighting, the total cost increasing to 1 franc 60 centimes, or to 15 centimes more than for street lighting with 1825 hours' illumination. The electric

burner will thus really supply the place of 20 gas-jets at a consumption of 140 litres an hour, altogether 2800 litres, or 2·8 cubic mètres. According to this, to compare with one burner at 1 franc 60 centimes, one cubic mètre of gas should cost 57 centimes. The above calculation is based upon average figures, and the most favourable circumstances for the electric light. Admitting that the motive power costs nothing, and that the candles burn the whole night through—4000 hours a year, or 11 hours a night—the items for coals and stoker's wages disappear, and the expenses for oil, repairs, and maintenance are diminished, as not required for the steam-engine; so that the expenses amount to 75 centimes instead of 95 centimes. By the omission of the steam-engine, the first cost is reduced to about one-half; rent and liquidation only come to 164 francs per year, or, divided among 4000 hours, to only about 4 centimes per hour. The total expenses per burner per hour thus amount to only 79 centimes, equivalent to the cost of 20 gas-jets consuming 140 litres, or 2·8 cubic mètres. This supposes the price of gas to be 28 centimes per cubic mètre. Thus, only under these exceptional conditions, which in practice will seldom occur, does the cost of electric lighting approach the normal price of gas in Germany. Therefore, it may be repeated that if we compare the present statement of the cost of the Jablochkoff light with that based upon the use of the old Gramme machine with continuous current, and of Serrin's lamp, the assertion will be proved that the progress in electric lighting instanced by the Jablochkoff candle was of a purely technical, not economical, nature, and that electric lighting with this system will be much more expensive than with the earlier systems. The utilization of the electric light is only to be sought for in the direction of concentration upon one burner of great intensity, not in the direction of greater division, which may only be attained through a proportionately larger outlay in carbons, capital, and power, as well as through a relatively greater loss of light. Last year's cost of electric lighting with the old Gramme system, under the most favourable circumstances, at 4000 hours' illumination, was 33 per cent. cheaper than under the present system. The chief

difference is in the important items for consumption of carbons, which with the Jablochkoff burners is three times as much as with Serrin's lamps.

Professor Oelhausen's statements are entitled to regard from his authority as a gas engineer, and because he does not condemn electric lighting entirely, but considers the actual cost of the Jablochkoff system in comparison with other systems previously tried.

In Paris, the Avenue de l'Opéra and the Place de l'Opéra, with the Place du Théâtre Français, were illuminated by 62 lights—46 single candles and 8 double candles—as previously stated, on the Jablochkoff system. This number of lights was supplied from four Gramme double or duplex machines, each driven by an engine of 20 nominal h.-p. The cost for this lighting was about two and a half times that of gas for equal illuminating power. At the Grandes Magazins du Louvre there were no less than 80 lamps, some of which were working night and day. The Arc de l'Étoile was illuminated by 16 lamps; at the Concert de l'Orangerie, Tuileries Gardens, there were 48 lamps. In the fronts of the Corps Législatif, the Church of the Madeleine, and on this boulevard, there were in all 14 lights. The Châtelet Théâtre employs 16; the Magazins de la Belle Jardinière, 12; the Grand Opéra, interior, 6, in addition to those outside in the Place; the *Figaro* offices, 2, worked from the printing machinery shaft; and the Hippodrome, 60 electric lights. In nearly every case the power absorbed amounts to 1 h.-p. per candle; and the cost of working a 16-light machine is given by the Jablochkoff Company, or Société Générale d'Électricité, as follows:—Each candle costs 7½*d.*, and its duration is one hour and a half. The company state that each candle gives a light equivalent to that from 100 gas burners, each consuming 3¾ cubic feet per hour.

	s.	*d.*
Cost of candles per hour	6	4
Coal, 18 h.-p., at 5½ lbs. per h.-p. per hour ...	1	6
Oil	0	2½
Driver	0	6
	8	6½

The cost to the public administration of gas in Paris is 3*s.* 5*d.* per 1000 cubic feet, and this price is doubled to private consumers. Assuming gas in London to be 3*s.* per 1000, the following are the costs to the consumers, as estimated by the company, of equal lights:—

	£	*s.*	*d.*
Gas, Ville de Paris	1	0	6
„ Paris, private consumer	2	1	0
„ London	0	18	0
Jablochkoff candle	0	8	6½

The approximate first cost of a machine and fixing on the Gramme-Jablochkoff system is—

	£
For four lights	200
„ six „	280
„ sixteen „	610
„ twenty „	650

and the interest on this first cost must, of course, be taken into account, as Professor Oelhausen has shown.

The cost of the Jablochkoff light per hour for the 62 lights in the Avenue de l'Opéra has been ascertained by M. Th. Lévy to be as follows:

	Francs.
Steam-power	3·30
Coal	6·64
Oil	1·23
Wages	3·20
Sixty-two candles at 50 centimes each	31·00
	46·27

or per light per hour $\frac{46{\cdot}27}{62}$ = 74·4 centimes, or 7½*d.* nearly.

From this it will be seen that if, as the company hope, the horse-power required can be reduced to ·33 horse-power per light, instead of 1·25 horse-power, a considerable difference will result, thus:

		Francs.
Steam-power	$3{\cdot}20 \times \frac{33}{125} =$	·845
Coal	$6{\cdot}64 \times \frac{33}{125} =$	1·753
Oil	$1{\cdot}23 \times \frac{33}{125} =$	·320
Wages		3·200
Candles		31·00
		37·118

or per light per hour $\frac{37{\cdot}118}{62} = 60$ centimes, or 6*d.*

In estimating the power of a light, the unit generally taken is a Carcel lamp burning 42 grammes, or 648 grains, of pure oil per hour. In comparing with this standard an ordinary street gas-jet burning 140 litres, or 4·94 cubic feet, per hour, it is found that the light so produced equals $1\frac{1}{10}$ that of a Carcel unit. The light produced by a Jablochkoff candle has been almost exactly determined by M. Th. Lévy, by the statements made at the Avenue de Villiers works belonging to the Compagnie d'Électricité, and by M. F. Leblanc, inspector of gas lighting for the city of Paris. From these various investigations it has been found that an electric light furnishes about 30 Carcel units. But as such a light cannot be used naked, but must be protected by an opal or other glass, the lighting power will be reduced to 18 or 20 Carcels measured on the plane of the light, and to $12\frac{1}{10}$ Carcels measured on the oblique rays falling on the ground. As will be seen, there is a considerable quantity of light lost in the passage of the luminous rays through the opaque glass. It results that one electric light gives on the ground a power equal to 12·10 Carcels, whilst a street gas-jet gives 1·1, so that the former is 11 times more powerful than the latter. But the gas company, on the other hand, state that by increasing the size of the jet, and thereby its consumption of gas, the lighting power of the latter can be largely increased. Thus, a jet burning 200 litres, or 7 feet, per hour, furnishes a light equal to 1·72 Carcels. In this case, therefore, the

electric candle would be equal only to seven jets of the enlarged type.

The experiments intended for the introduction of the electric light into London have not included, as far as street lighting is concerned, any other system than the Jablochkoff. This system has been applied on the Thames Embankment and on the Holborn Viaduct.

Between Westminster and Waterloo bridges, 20 Jablochkoff candles light the Embankment. The motor power is obtained from a 20 nominal h.-p. engine, having two 10 inch cylinders with 13 inch stroke, and 360 feet of heating surface, and indicating 60 to 70 h.-p. This engine is worked at 62 lbs. pressure, and 140 revolutions. The Gramme "generator" employed makes 650 revolutions, and the "distributor" 700 revolutions, per minute. There are taken from this machine four circuits of five lights each, the most distant light from the machine being at 700 yards, and the distance between the extreme lights 1170 yards. The cables from the machine are led through a drain-pipe to the Embankment subway. Above the subway, where each lamp occurs, the wires are led up through a tube let into the granite pedestal. The globes contain each four candles, giving light for six hours.

The Holborn Viaduct lighting has been discontinued, but was supplied from similar machines driven by similar power. The average distance apart of the lamps, measured diagonally across the roadway, was 110 feet, each lamp illuminating an area of 888 yards' surface of the public way. The report by Mr. Haywood, the engineer to the City Commissioners of Sewers, states that the lamps were lit from sunset to midnight. The number of gas lamps not lighted when the electric lamps were burning was 86. At midnight 61 gas lamps were lit, 25 remaining unlighted owing to the electrical apparatus. The conductors were laid in earthenware tubes beneath the public ways; in the subway they were supported on narrow boards spiked to the walls. In the bases of the columns supporting the lamps were placed the commutators for changing the current from one candle to another, and to these commutators access was given by doors in the bases.

As to cost, the company, the Société Générale d'Électricité, agreed to provide, fix, and fit up the engine, machinery, conductors, and lamps for £236. The commissioners agreed to provide for the foundations for the engine and machinery, the engine shed, and to do all the work beneath the public ways, costing £267. The gas company agreed to deduct the value of the gas not consumed while the experiment was being made, this deduction amounting, with cleaning, to £56 8*s.* 2*d.* The lamplighter's wages were £18 6*s.* 8*d.*, and the total cost of the experiment for the 64 nights was £785 4*s.* 5*d.* The 16 electric lamps were lit from sunset to midnight, at a charge of £5 per night averaging seven hours. The cost per lamp per hour was over 10*d.*, and assuming them to have been lighted for the remainder of the night at the same rate, the cost for the whole would have been £10 per night. A gas lamp on the Viaduct, including lighting, extinguishing, and cleaning, costs £4 17*s.* 6*d.* per annum. It was alight 4300 hours annually, and the cost of each lamp per hour was a little over a farthing. The cost therefore of lighting the whole Viaduct during the winter months by electricity would be 14*s.* 3½*d.* per hour, and by gas 1*s.* 11¼*d.* per hour; or, by night of 14 hours' duration, £10 for electricity, and £1 7*s.* 1½*d.* for gas. Applying these rates to a whole year, electric lighting would cost about £3072, and gas lighting £419. Electric lighting, at present charges, was therefore about seven and a half times dearer than gas. It was, of course, probable that, as a permanent arrangement, electricity would cost less than that amount, while there was reason to believe that no material reduction would be made in the cost of lighting by gas. As to illuminating power, Colonel Haywood estimates approximately that it is about seven times that of gas. If this estimate be correct—and it is to be regretted that no direct measurements were made—the cost of electric lighting for equal light power would be only 7 per cent. dearer than gas lighting, a difference that would doubtless disappear in a continued trial.

That the gas authorities are wise in endeavouring to obtain a true statement of the cost of electric lighting, cannot be

doubted, but the "Report of a Committee appointed by the Court of Directors of the Gas Light and Coke Company, to investigate the question of producing Light by means of Electricity, together with its cost and illuminating power, as compared with an equal amount of Light produced by Gas," can scarcely be considered anything more than a very biased judgment. The comparison was made between one small Siemens machine and lamp giving photometric value of 1727 candles, and four sun burners, each containing 63 jets, and consuming 190 feet of gas per hour, or 760 feet for the four lights. The cost of obtaining the Siemens light, for 1000 hours' illumination, is given as:—

	£	s.	d.
One six-horse engine and boiler with fittings complete	200	0	0
One dynamo-electric machine with lamp, conductors, and fitting complete	150	0	0
	350	0	0
Expenses for working:—			
Interest at 5 per cent. on 350*l.*	17	10	0
Wear and tear at 10 per cent. on 350*l.* ...	35	0	0
Fuel for engine working for 1000 hours in a year, including loss incurred in getting up and letting down steam at 1*s.* 6*d.* ...	75	0	0
Labour attending engine and boiler and lamp, at 1*s.* 6*d.*	75	0	0
Carbons, including waste, at 5*d.* per hour ...	21	0	0
Oil for electric machine, engine, etc. ...	4	10	0
	228	0	0

or. 4*s.* 6*d.* per hour.

The cost is given of obtaining an equivalent gas light with a combustion of 540 feet per hour:—

	£	s.	d.
Four sun burners fitted complete, with electric apparatus for lighting same	100	0	0
Expenses of working:—			
Gas burning 1000 hours, 540,000 cubic feet at 3*s.* 6*d.*	94	10	0
Wear and tear of burners at 5 per cent. ...	5	0	0
Interest of capital at 5 per cent.	5	0	0
Attendance for lighting, etc.	5	0	0
	109	10	0

or, say, 2*s.* 3*d.* per hour.

This comparison is wholly one-sided. In the first place, to produce a single light of the candle-power quoted, only 2½ h.-p. is necessary, and machine, lamp, engine, boiler, and fittings could be obtained for £150. The number of hours, 1000 per annum, is far too small, and includes only three hours a day. This should be at least 2500 hours. The charge for fuel, accepting the above statement, would be at more than 40 lbs. per h.-p. per hour. Correcting these data, we have:—

	£	s.	d.
Dynamo-electric machine and motor ...	150	0	0
Expenses for working:—			
Interest at 5 per cent. on £150	7	10	0
Wear and tear, 10 per cent.	15	0	0
Fuel at 4 lbs. per h.-p. per hour, allowing 20*s.* per ton, and one-sixth time for getting up steam and banking fires	12	0	0
Labour for 2500 hours at 7½*d.*	78	10	0
Oil	10	0	0
Carbon, including waste, 5*d.* per hour ...	52	0	0
	175	0	0

or 1*s.* 5*d.* per hour, say.

Now, the gas would cost, taking the above data for 2500 hours:—

	£	s.	d,
£94 10*s.* × 2½	236	5	0
Wear, tear, interest, and attendance as before ...	15	0	0
	251	5	0

say 2*s.* per hour.

The question, not for what *can*, but for what *might*, or *will*, the electric light be supplied? is that most interesting to the general public. It may be assumed that the general public are so far satisfied with the present system of lighting by gas, that electric lighting, to be adopted, must give at least greater brilliancy for the same cost. To reduce the present cost of electric lighting, makers of the machines and lamps will be compelled by competition to reduce their absurdly high prices. In the preceding instance, the price of £70 is allowed for a machine in which there is about £25 in value, with a fair

margin for profit, even at that. A simple lamp, costing £5, could be made at the present time. Carbon rods, now sold at fancy prices, would by competition be reduced to their true value, about 1*d.* per hour in cost, since only one carbon need be consumed. With these data, we need only to consider two cases—one in which motive power is supplied from working shafts, and another in which the motive power has to be separately supplied.

	£	s.	d.
Apparatus and machines	30	0	0
Interest, 5 per cent.; wear and tear, 10 per cent.	4	10	0
Fuel	12	0	0
Attendance and oil	15	0	0
Carbons	10	0	0
	41	10	0

say 4*d.* per hour. To this must be added, for the case of a separate motor, the cost of attendance to the engine, interest, wear, and tear, which would nearly treble the cost.

In favour of this view is the account from the Lowell Mills, in America, where the Brush electric-light system is very extensively used. This system, producing on one circuit 16 lights of 2000 candle-power each, with an expenditure of $13\frac{85}{100}$ h.-p., at a cost of 4*d.* per hour per lamp, is the cheapest realization that at present is well authenticated. It is, we repeat, much to be deplored that the authorities had not consulted some committee of electricians, or electrician of known standing, in forming their conclusions as to the selection of a system, before partially condemning the electric light from judgment formed from a system not consistently economical as regards scientific principles.

Before leaving the subject of cost, something must be said concerning the invention of Mr. Edison. So much has been anticipated from the statements made, not by Mr. Edison, but by reporters, who were unfortunately allowed to remain uncontradicted. The most recent statements to this date (March, 1879) are that Mr. Edison is able to produce 14 lights on one circuit, of 20 candle-power each, with an expenditure

of 2 h.-p., on a Gramme machine. There are no details at present to hand sufficient to afford an accurate estimate of the cost of Mr. Edison's lamps, because the platinum-iridium alloy he employs may be very costly. It may be assumed that the cost price of the 14 lamps and the machine would be included under the sum of £200, and that of a motor and boiler under the sum of £60, with fixing and conductors at £15; total, £275. It must be remembered that there are no carbons to be consumed, and no attendance or attention required for the lamp, in Mr. Edison's system. Hence the cost per annum for this system would be—

	£	s.	d.
Depreciation and interest, 10 per cent. ...	27	10	0
Fuel, as before	12	0	0
Attendance and oil	15	0	0
	54	10	0

or, say, 5*d.* per hour per total of 14 lights; nearly $\frac{1}{5}$*d.* per burner of 20 candle-power per hour, under the circumstances of no special attention being required. This would be cheaper than petroleum, the cheapest source of domestic lighting; so that, despite contradiction, we may ultimately hope for domestic lighting by electricity, with extended practice and more favourable circumstances than those now under experimental trial.

Amongst the numerous uses of the electric light is its application to mining purposes. In the salt-mines of Great Marston, in Cheshire, and in a coal-mine near Wattenschied, in Germany, this light has given satisfactory results, at a cost of $2\frac{1}{4}$*d.* for each light an hour.

CHAPTER X.

DIVISION OF THE ELECTRIC LIGHT.

THE "division of the electric light" is a term the true rendering of which should be the "division of the electric current" to produce numerous small light centres instead of one or more powerful lights. Much nonsense has been talked in relation to this subject. Some inventors have claimed the power to "indefinitely divide" the electric current, not knowing or forgetting that such a statement is incompatible with the well-proven law of conservation of energy.

Whether the electric current be utilized in the production of light, either by means of the voltaic arc or of incandescence, the production of a certain amount of light depends upon the amount of current passing, not directly, but in such a proportion that offers speedy limit to the number of lights to be obtained. The law is a very simple one. It is that the heating effect of the electric current will be proportional to the square of the amount of current multiplied by the resistance, both expressed in convenient units. Suppose, then, that two lights exist of a certain power each on two circuits derived from a main circuit, and that two more lights are required to be added, one in each of another two circuits again derived from the main circuit; the current formerly passing in each of the circuits when only two existed will be halved by the introduction of the other lights, and, according to the law, the heating effect in each circuit will be only one-fourth of that occurring with two lights. Actually, as the lighting effect bears to the heating effect much the same relation as the heating effect does to the amount of current, the decrease of light is much greater. With a given current-source, the division of the electric current is, therefore, anything but "indefinite."

Even with gas, which possesses the great advantage of yielding a large number of small lights, the greatest economy is obtainable with concentrated lights; and it is well known that the ignition of extra burners on a pipe of small diameter materially reduces the light in those burners already ignited. Though noticeable in a much less degree, because obeying a different law, with a fixed supply of gas the reduction of light arising from the ignition of fresh burners is appreciable, and shows that the electricians who claim "indefinite" subdivision exceed what is required or possible.

The subject of providing numerous small lights from one electric source is not new, and has always had great attraction for electricians. M. Chanzy's system appears to have been the first, but of this there is no record in detail.

Lacassagne and Thiers were the next (1854) to devote their attention to this subject, and the following is a description of their method as recorded in the specification of the letters patent:—"When in any part of the circuit the current has to pass through a liquid of less conductivity than that of the reophores, the intensity or quantity of electricity passing in a given time is inversely proportional to the resistance of the interposed liquid. This resistance may be increased or diminished, either by an increase or decrease of the conducting power of the liquid or of the surface immersed. The magnetic force of an electro-magnet varies with the intensity of the current. If the surfaces of the conductors immersed in the liquid are of an unchangeable metal, we obtain in a free state the gas arising from the decomposition of the liquid; the quantity of this gas in a given time being in direct proportion to the intensity of the current."

Lacassagne and Thiers arranged two conductors of a battery to each of the poles, attached a plate of platinum to each extremity, and suspended the plates in the interior of a glass gasometer containing acidulated water. The bell of the gasometer was raised or lowered by the inlet or outlet of the gas produced by the current. The ascent of the bell produced, of course, a diminution of the galvanic intensity, whilst its descent produced the opposite effect. An electro-

magnet, with an armature in the form of a lever, and an opposing spring, completed the arrangement. The spring was first adjusted to the strength of the current determined upon. As long as the magnetic attraction was greater than the tension of the spring, the armature remained in contact, and as the gas which was developed had no outlet, the bell of the gasometer was raised, thus diminishing the surface of the platinum in contact with the liquid, and consequently the quantity of the current.

De la Rive and Wartmann observed, in 1867, that, with sensitive electric lamps, the current could be interrupted for the thirtieth of a second without interruption of the light, but that interruption for one-tenth of a second sufficed to cause extinction. Le Roux took advantage of this discovery, and, by means of a distributing wheel revolving at high speed, sent the current alternately into two lamps, thus maintaining perfect equal lights.

Mersanne, in 1873, extended Le Roux's idea, replacing the distributing wheel by a horizontal spindle, carrying a series of cams. The cams imparted reciprocating motion to a series of rollers attached to vertical metallic arms, which made contact with mercury caps. Several lamps were thus successively introduced into the circuit, and the lights could individually be any power required, regulated by the length of interruption. The same end has recently been attained by Mr. Cowling Welch, who distributes the current by a rotating switch successively over a number of circuits.

The nearest approaches to practical subdivision have been made by Brush, Jablochkoff, and Edison, with the systems we have described; and without doubt the most economical method will be that in which the largest number of lamps or burners are included in a single circuit. The reason for this is almost obvious; for whereas the reduction in lighting power in multiple arc is greater than in relation to the square of the number of lights, in the case of a series of lamps on a single circuit, the reduction results from the loss of current due only to the increased resistance—a matter merely of direct proportion.

CHAPTER XI.

MARITIME AND MILITARY APPLICATIONS.

In 1862 the electric light was established at Dungeness. The optical apparatus for the electric light was so arranged in the lantern as not to interfere with the oil-light apparatus, which was retained in case of accident. It consisted of a small dioptric apparatus of the sixth order, with a focal distance, in the central plane, of 150 millimètres. Two lamps were provided and arranged on a shunting table and railway, that either could be instantly placed in the focus of the optical apparatus. A second optical apparatus was placed above the first, with two additional lamps, for safety. The carbons employed were a quarter of an inch square, the upper carbon being 12 inches long, and the lower one six inches long. The mean intensity of the light produced at the focus of the optical apparatus was about 670 candles; the mean intensity of the beam in the most illuminated plane was about 19,000 candles, being about 12½ times the intensity of the old catoptric light. The electric light gave a total annual cost of £1593 13*s.* 1*d.*, against £535 9*s.* 8*d.*, the total previous cost for oil. The cost per candle per hour is 0·1165*d.* for oil, and 0·1294*d.* for electricity. A Holmes machine was employed.

At the Souter Point lighthouse only one Holmes machine is necessary in clear weather, but when the atmosphere is impaired for the transmission of light, by rain, mist, or snow, two machines are worked. Either or both of the magneto-electric machines can be worked by either engine and one boiler, so that the complete apparatus for the production of the electric light is in duplicate. The conducting cables

between the magneto-electric machines and the lamp in the lantern are 175 feet in length, and consist of the following: Between each magneto-electric machine and a current-changer, fixed against the wall of the engine-room, there are two copper wires a quarter of an inch in diameter; and from the current-changer to the lamp in the lantern there are three insulated cables—one large, of nineteen copper wires No. 16 B. W. G., and two small, of seven wires No. 14 B. W. G. With the current from one machine the large and one small cable are used, the large cable going to the upper carbon, and the small cable to the electro-magnet of the lamp and lower carbon.

With the second machine added, one current is coupled with that of the other machine, and sent through the large cable to the upper carbon, and the other current is sent through the third cable direct to the lower carbon, without passing through the electro-magnet. With this arrangement no alteration in the strength of the electro-magnet of the lamp occurs in altering the light from single to double power, or from double to single power, and, consequently, no readjustment of the lamp with these changes of intensity is necessary.

A lower reflecting light from the same luminary as the upper light is shown from a window in the tower, 22 feet below the upper light, for marking dangers in Sunderland Bay, distant six miles. The idea of thus utilizing the rear light was suggested by Mr. Douglass, and the optical apparatus consists of a glass holophate of 150 millimètres' focal distance, intercepting the landward arc of light. The beam is received on a series of straight right-angled prisms, which reflect it perpendicularly on to a series of nearly right-angled prisms arranged conically, and placed at the required level of the lower light. This is the first instance where a lower light has been shown from the same source of light as the upper one. The cost of the light per hour for the year of 4412 hours is 99·8*d.*; and the hourly cost per unit of light having a mean intensity of about 1768 candles for the year of 4412 hours, is 0·0564*d.*, being a reduction in the cost, compared with the light at Dungeness, as 100 to 43·6.

The success with these electric lights caused it to be introduced at the South Foreland high and low lighthouses. The machinery and apparatus for the production of the electric lights at the South Foreland consist of a pair of horizontal condensing engines, each of 10 nominal h.-p.; a pair of Cornish boilers; four of Holmes's improved magneto-electric machines of the same model as those for Souter Point. The cost per candle per hour is 0·1394*d.* for oil, and 0·0426*d.* for electricity, or as 100 to 30·6.

At the Lizard lighthouses, six dynamo-electric machines are provided, each producing a mean intensity of about 3·620 candles. These machines are arranged in three pairs, each pair being driven by a belt off a pulley on the fly-wheel shaft of the engines, the speed of the engines being 60 revolutions per minute, and that of the dynamo-electric machines 850. Each pair of dynamo-electric machines is fitted and bolted to the same cast-iron base-plate. The axle of each machine is connected to the axle of the pulley frame by a faced disc coupling and four bolts, and thus no strain in driving is incurred at the axle or bearings of the dynamo-electric machines. During clear weather the current from one machine, as at South Foreland, is sent to each lantern; a second engine, with banked fire, and its two dynamo-electric machines, being kept in readiness for immediate use; and when the atmosphere is impaired, by rain, mist, or snow, for the transmission of light, the second engine is started, with its two dynamo-electric machines, and the current from two machines coupled is sent to each tower, giving a mean intensity each of about 8250 candles. The conductors between the dynamo-electric machines and the lamp in each lantern, a distance of about 280 feet, consist of 19 copper wires of No. 16 B. W. G., covered with one layer of felt tape, then insulated with pure india-rubber, and covered with a double layer of cotton tape saturated with india-rubber solution, the cables having a diameter of 0·425 inch. The conductivity of the copper wire of these cables is 90 per cent. of that of pure copper. The cables are led from the dynamo-electric machines along the surface of the walls at the upper part

inside the buildings, and are carried by means of wooden suspenders secured to the walls at every three feet. A current-changer is fixed to the wall of the engine-room, and is so arranged that the current from any one of the dynamo-electric machines, or any pair of machines, may be promptly sent to the lamp in either of the lanterns. The lamps, six in number, being two for each lighthouse, and two spare, are Siemens', with some special additions suggested by Mr. Douglass, for meeting the requirements of a lighthouse. The arrangements for working these lamps in the lanterns are the same as at the South Foreland. The cost per hour for the year of 4412 hours is 55·29*d.* per hour for oil, and 128·6*d.* for the electric light. Estimating the comparative cost on the quantity of light provided at the focus of each optical apparatus, the cost per candle per hour is 0·1047*d.* for oil, and 0·0147*d.* for the electric light.

The south lighthouse at Cape La Hève, France, was lighted by electricity in 1863, and the north lighthouse in 1865. These are both white fixed lights. The lighthouse at Cape Gris-nez was lighted by electricity in 1869. This is a flashing light, showing a white flash at intervals of 30 seconds. At the Cape La Hève, the machinery and apparatus consist of two portable steam engines, each of eight h.-p., and four Alliance magneto-electric machines, each containing 48 helices arranged in six wheels, and 56 compound permanent magnets. The intensity of the light produced by one Alliance magneto-electric machine in a Serrin lamp is equivalent to 1920 candles. During clear weather, only one magneto-electric machine is employed for each lighthouse; with thick weather, two magneto-electric machines are employed. The intensity of the light from the optical apparatus with the light of one machine is estimated by M. Allard at 43,200 from English units. With two machines this intensity is doubled. At Cape Gris-nez, two steam engines and two Alliance magneto-electric machines are employed. The intensity of the light produced by each machine is equal to 2880 English units. The intensity of the flash from the optical apparatus, with this luminary in focus, is estimated at 288,000 English units.

When both magneto-electric machines are employed, this intensity is doubled.

The electric lighthouses already described, five in this country and three in France, are, with the exception of one at Odessa and one at Port Said, all the lighthouses in which the electric light has yet been established. The Odessa lighthouse employs two Alliance magneto-electric machines and two steam engines, which are worked alternately every ten or fifteen days. Serrin regulators are used for the light. At the Port Said lighthouse there are two Alliance magneto-electric machines, and two steam engines, each of 5 h.-p.

No important stoppage of these electric lights has occurred since they were first established.

In the following table, given by Mr. Douglass, the able engineer to the Trinity House, are shown the comparative average cost and annual maintenance of a single lighthouse shore station in this country, with colza oil, mineral oil, coal gas, and electricity employed as the illuminating agents. It is assumed that there is no fog signal. In all cases, either with or without a siren fog signal, where a maximum intensity of the luminary is required not exceeding that of the flame of the six-wick oil lamp, viz. 722 candles, a minimum annual cost at the present moment is attained with mineral oil. For a maximum intensity exceeding this, and not exceeding about 5000 candles, the probable limit of coal gas, the competition as regards cost lies between coal gas and electricity, and is in favour of the former, in consequence of the necessity for a larger number of attendants with the electric light, five being required as compared with three for gas; but where a maximum equal to the single or combined intensity of the Lizard luminaries is demanded—8250 or 16,500 candles for some of the most important coast lights—the cost of the more intense electric luminary is found to be per unit of light provided, irrespective of its greater value in the focus of the optical apparatus, about $\frac{13}{22}$ and $\frac{6}{22}$ respectively of that of coal gas at its maximum intensity, and about $\frac{13}{65}$ and $\frac{6}{65}$ respectively of that of mineral oil at its maximum intensity. With intensities of the electric luminary up to about 40,000

TABLE SHOWING THE COMPARATIVE COST OF A SINGLE LIGHT PRODUCED BY COLZA OIL, MINERAL OIL, COAL GAS, AND ELECTRICITY.

	Colza Oil.		Mineral Oil.	Gas (Wigham's System).			Electricity.	
	Old Fresnel System.	New Trinity House System.	Trinity House System.	Six-wick Oil-lamp Intensity.	Halsboro' Intensity.	Galley Head Intensity.	One Lizard Intensity.	Two Lizard Intensity.
First Cost.	£	£	£	£	£	£	£	£
Land, buildings, and lantern ...	5500	5500	5500	6700	6750	6800	9500	9800
Machinery and plant	160	200	200	660	990	1300	2300	3850
Dioptric apparatus	1700	1700	1700	1700	1700	2500	1700	1700
	7360	7400	7400	9060	9440	10600	13500	15350
	2 Men.	2 Men.	2 Men.	3 Men.	3 Men.	3 Men.	5 Men.	5 Men.
Annual Maintenance.	£ s. d.	£ s. d.	£ s. d.	£ s. d.	£ s. d.	£ s. d.	£ s. d.	£ s. d.
Wages and allowances	155 12 9	155 12 9	155 12 9	239 0 0	239 0 0	239 0 0	397 9 2	397 9 2
Coal, coke, carbons, oil, & stores	129 13 3	210 12 3	110 3 9	48 11 8	141 1 10	224 0 0	331 0 10	368 6 0
Carriage and incidentals	10 0 0	10 0 0	10 0 0	12 10 0	12 10 0	15 0 0	20 0 0	20 0 0
Repairs and renewals	156 18 0	158 10 0	158 10 0	194 18 0	208 17 0	254 0 0	302 10 0	369 0 0
Interest on first cost at 3½ per cent.	257 12 0	259 0 0	259 0 0	317 2 0	330 8 0	371 0 0	472 10 0	537 5 0
	709 16 0	793 15 0	693 6 6	812 1 8	931 16 10	1103 0 0	1523 10 0	1692 0 2
Intensity of Luminary at focus of Optical Apparatus.	Candles.	Candles.	Candles.	Candles.	Candles.	Candles.	Candles.	Candles.
Hours.								
Minimum for 305 nights (3692)	269	342	342	342	832	1253	3620	8250
Maximum for 60 „ (720)	269	722	722	722	2923	5012	8250	16500
Mean for 365 „ (4412)	269	404	404	404	1173	1866	4375	9596
Total light per annum in candles	1186828	1782504	1782504	1782504	5176304	8234716	19305040	42339000
Hours.	d.	d.	d.	d.	d.	d.	d.	d.
Cost of light per hour (4412)	38·6	43·2	37·7	44·2	50·7	60·0	82·9	92·0
„ per candle, or unit	0·143	0·107	0·093	0·109	0·043	0·032	0·019	0·009
Or as	100	74·8	65·0	76·2	30·1	22·4	13·3	6·3

candles, the cost per unit would prove still more in its favour, no further addition to the working staff being necessary.

Statement showing the consumption of coke at the Lizard lighthouses, with the quantity of light produced per lb. of coke consumed, and per h.-p. absorbed by the electric machines, inclusive of expenditure for reserve of engine-power for accidents, doubling the intensity of the light when required, banking fires, etc.:—

Annual consumption of coke in tons	95
Lbs. of coke consumed per hour of light exhibited (4412 hours)	48·2
Intensity of light produced at focus of optical apparatus, in candles: Mean for 365 nights (4412 hours) ...	8751
Quantity of light in candles produced per lb. of coke consumed	182·0
Quantity of light in candles per h.-p. absorbed by electric machines	1097

The advantages of electric lighting on board ship are not so well understood as they should be. The chief object is to increase safety, by avoiding collisions and facilitating the entrance to ports. It also admits of loading and unloading being effected by night, as well as in daylight. The apparatus usually comprises a beacon, a generator of electricity, a portable lamp, and various accessories. The beacon on board the s.s. *Amerique*, where the light was first introduced, is placed on the top of a small iron-plate turret ascended by steps in the interior, without the necessity of passing along the deck, as the turret is immediately over a hatchway. This arrangement is of great advantage in bad weather, when the fore part of the ship is accessible with difficulty by the deck. The turret was originally 21 feet high. It was reduced to six feet to give it greater stability. Its diameter is three feet. It is fixed on the fore part of the vessel, 45 feet from the bow.

The Gramme magneto-electric machine has a power of 1800 candles, and weighs 44 lbs. It is driven by a three-cylinder Brotherhood engine. The average speed is 850 revolutions a minute, both for the machine and the engine.

In the *Amerique*, the light is automatically intermitted.

This intermittence is effected by a small and very simple mechanism fixed on the shaft of the machine. The current goes alternately through the carbon of the lamp, and through a closed metallic circuit, which becomes alternately heated and cooled.

The applications to our own navy, as well as to the navies of foreign countries, generally follow this plan, or do not sufficiently depart from it to need special description.

As a torpedo defence, the electric light is likely to prove of the greatest value, because by its aid the approach of a torpedo-boat can be easily detected. To direct and concentrate the light, Messrs. Sautter and Lemonnier have constructed a lenticular projector (Fig. 89), comprising a Fresnel lens, composed of three dioptric and six catadioptic lenses. The lamp and the lenses are carried by a cast-iron drum, movable around its vertical axis, and turning on a horizontal axis. The turning and oscillatory movements may be successive or simultaneous; they direct the luminous beam in all directions and at any inclination, and can be effected by the operator, who has position behind the projector.

A small camera lucida, placed on one of the bearings of the cylinder, projects the image of the carbons upon a ground-glass screen, and allows of observation of the working of the lamp without the necessity of opening the cylinder. By means of a screw, the position of the lamp can be altered, when it is required to shift the luminous point beyond or from the focus, to produce greater or less divergence of the beam. A second screw and clamp serves to maintain the beam in a given direction—the screw stopping the turning movement; the cramp preventing oscillatory movement.

For artillery purposes, a special arrangement permits, by means of tangent screws, of slowly displacing the luminous beam, and of exactly striking a previously given direction.

The complete apparatus is placed on a cast-iron socket, which can be affixed to the bridge on board ship, to the interior of a casemate in a fort, or on a movable carriage. By the aid of an interrupter, the current can be suppressed at will without stopping the machine.

FIG. 89.

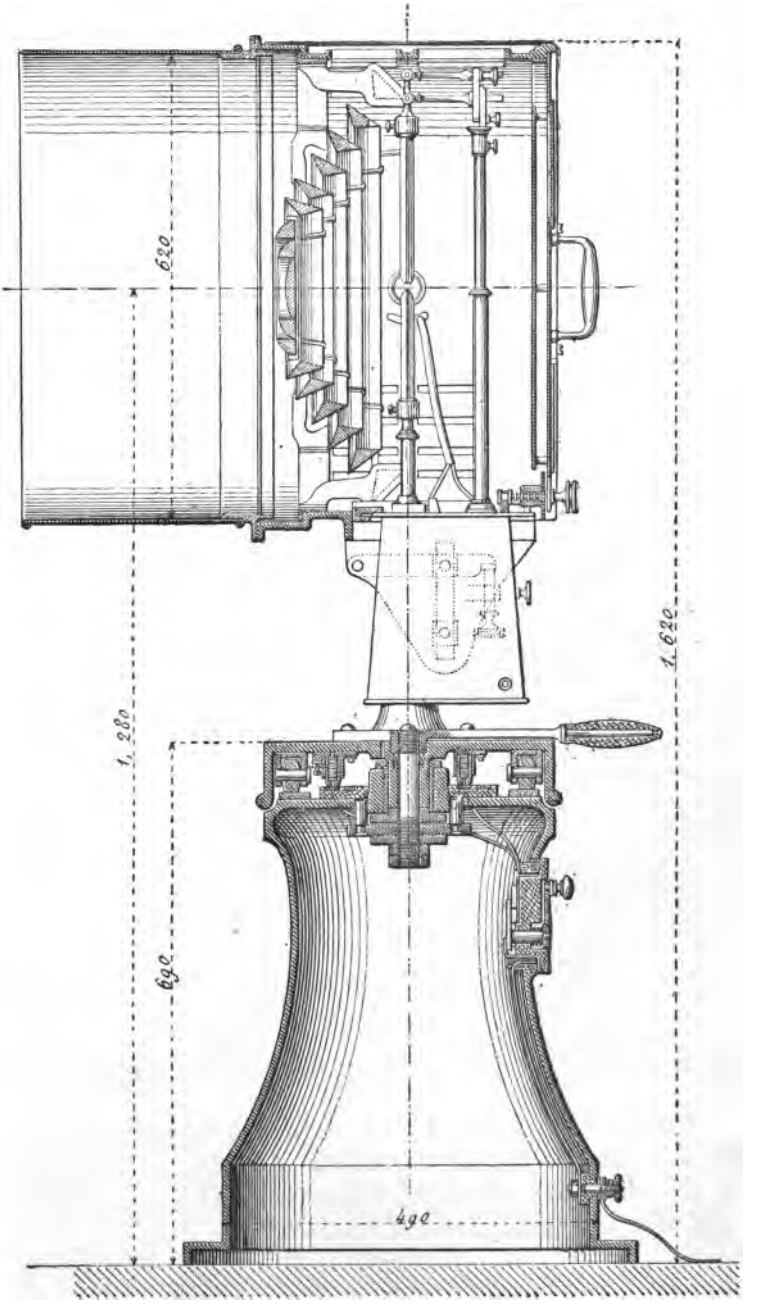

For military operations, a portable machine and engine have been combined and mounted on a trolly. The engine (Fig. 90) is on the three-cylinder system, as designed by Brotherhood.

FIG. 90.

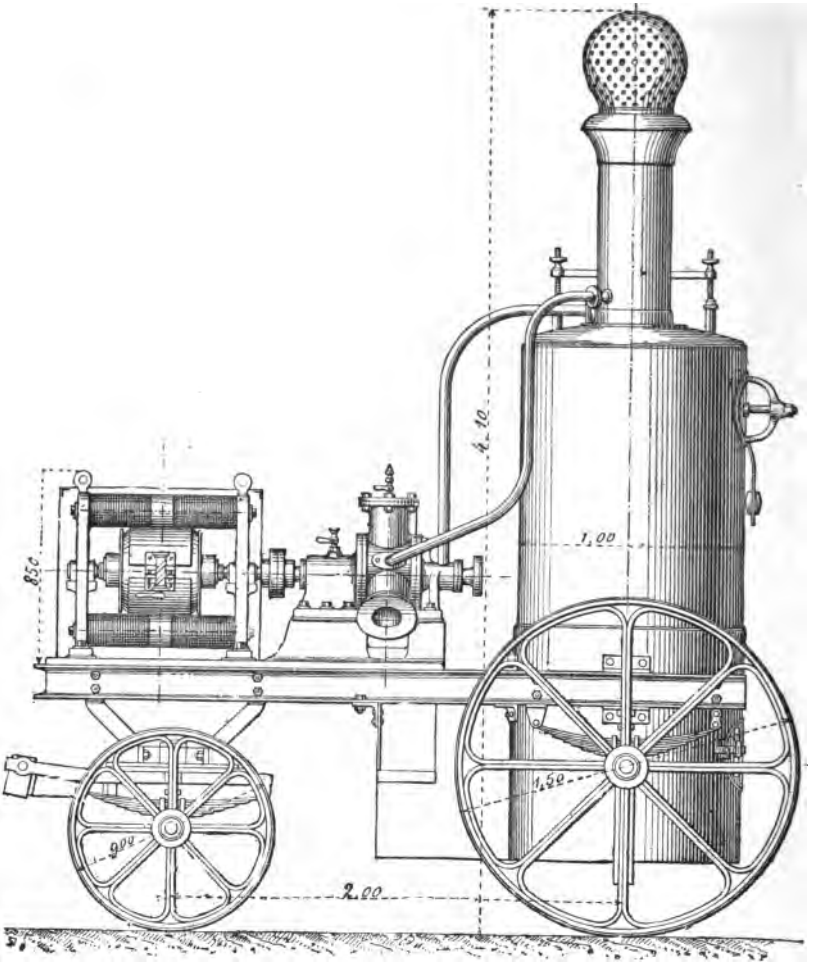

The electro-magnets of the machine are flat and very large; the coil has two current collectors. A commutator mounted on the armatures admits of the coupling of the machine in tension or in quantity instantaneously.

From trials at Mont Valérien with a Gramme machine thus arranged, and with a special projector, an observer at the side of the apparatus could see objects 18,000 yards distant, and clearly distinguish details of construction at 15,000 yards. These trials, which were made in tolerably clear weather, with a transparent atmosphere, have been repeated on dark nights with every success.

A great advantage that the Gramme machine possesses for military operations is the power, by simple manipulation of a commutator, of instantly giving twofold more powerful light, or reciprocally. This result is obtained by coupling the machine in tension or in quantity. When the weather is clear, the machine should be coupled in tension; then the expenditure of steam is small, and the carbon rods are slowly consumed. When the weather is foggy or very obscure, the machine is arranged in quantity, the expenditure of steam is increased, and the carbon rods are consumed more quickly.

CHAPTER XII.

VARIOUS APPLICATIONS OF THE ELECTRIC LIGHT.

THE electric light has now been so extensively introduced, that it would be tedious to enumerate the various employers; a few illustrations will suffice to show some of the accessory ways and means of its adoption.

FIG. 91.

Fig. 91 illustrates the use of the electric light in illuminating a dockyard in course of construction, in the case of the Spanish Northern Railway, near the Guadurama Mountains,

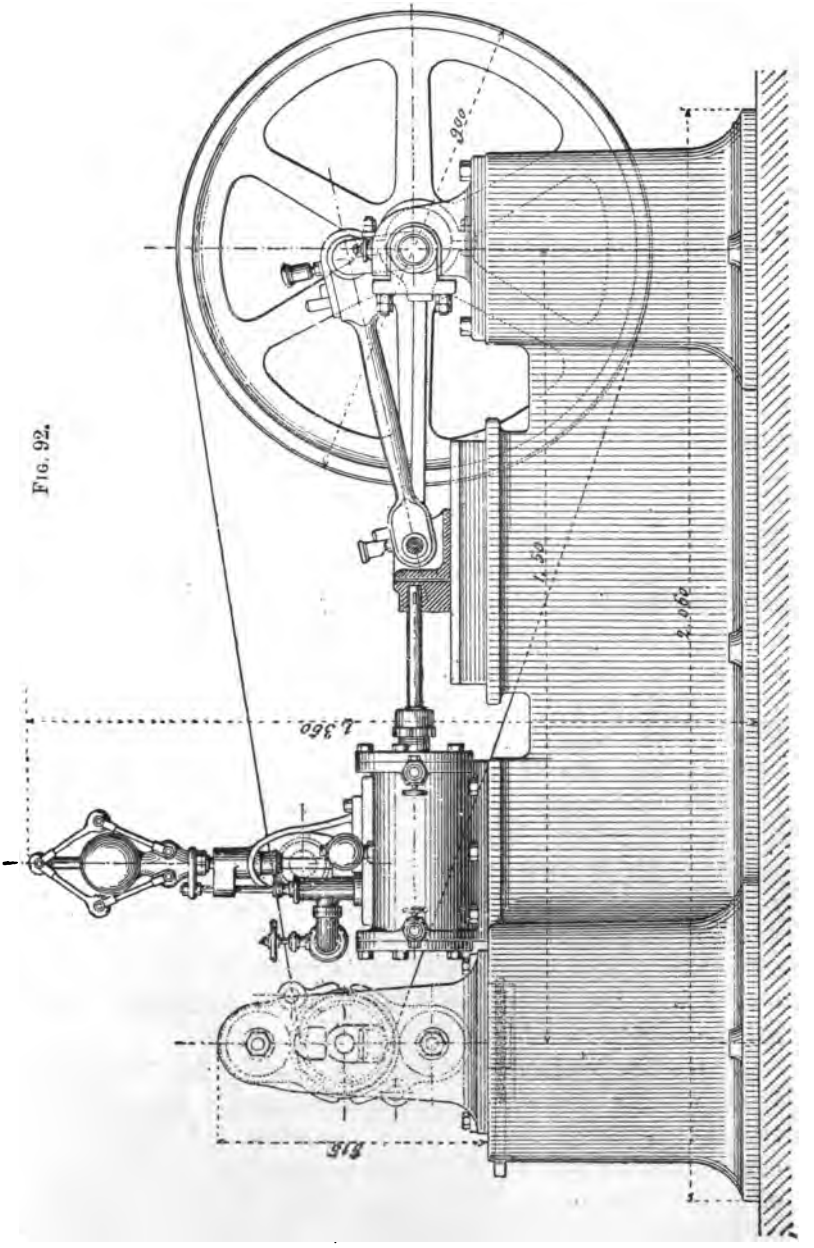

FIG. 92.

in 1862. Serrin lamps and batteries were employed, at a cost of 2*s*. 6*d*. per hour per lamp, there being 10 lamps in use for a total period of 9417 hours. This cost was 60 per cent. cheaper than that of torchlight. In the galleries of the mines and pits in connection with these works, the electric light was found of the greatest service, as it did not vitiate nor heat the atmosphere. This application affords an example of the introduction of the light under its most expensive condition, and where power for driving a machine is not available.

A method of mounting the magneto-electric machine upon the same base as the motor is shown in Fig. 92, as applied to a Gramme machine. The dimensions are in metric measure.

It is of considerable convenience to be able to renew the carbons in a lamp without the use of ladders or steps, and for this purpose M. Menier has devised the following suspension for the lamps employed in his extensive factories (Fig. 93). The roller, A, consists of two cast-iron cheeks, mounted on a wooden base, with a drum of vulcanite. The conductors are attached one to each cheek, and these cheeks to the conductors within the suspending cable. The cable, B, has an external covering of hemp, upon a coating of india-rubber, which encloses a series of copper wires braided like a wick, this again enclosing a second sheathing of india-rubber, which insulates the core of a strand of copper wires. A ratchet prevents the descent of the lamp. This cable, passing over a couple of pulleys, is attached to a small plate, connected to the lamp by two curved bars, C. The current is conveyed to the terminals of the lamp by the curved bars, one of which is connected to the metallic core of the cable, and the other with the braided wick of wires, which in turn are connected with the conductors leading to the terminals of the magneto-electric machine.

A peculiar system is adopted in lighting the Louvre at Paris, where a very diffused light is required. The space G (Fig. 94) is above the centre of the room. A lamp, A, is counterpoised by the weight C, and is suspended above a sheet of frosted plate-glass, E, the object of which is to prevent the production of objectionable shadows. Four surfaces, F, are

FIG. 93.

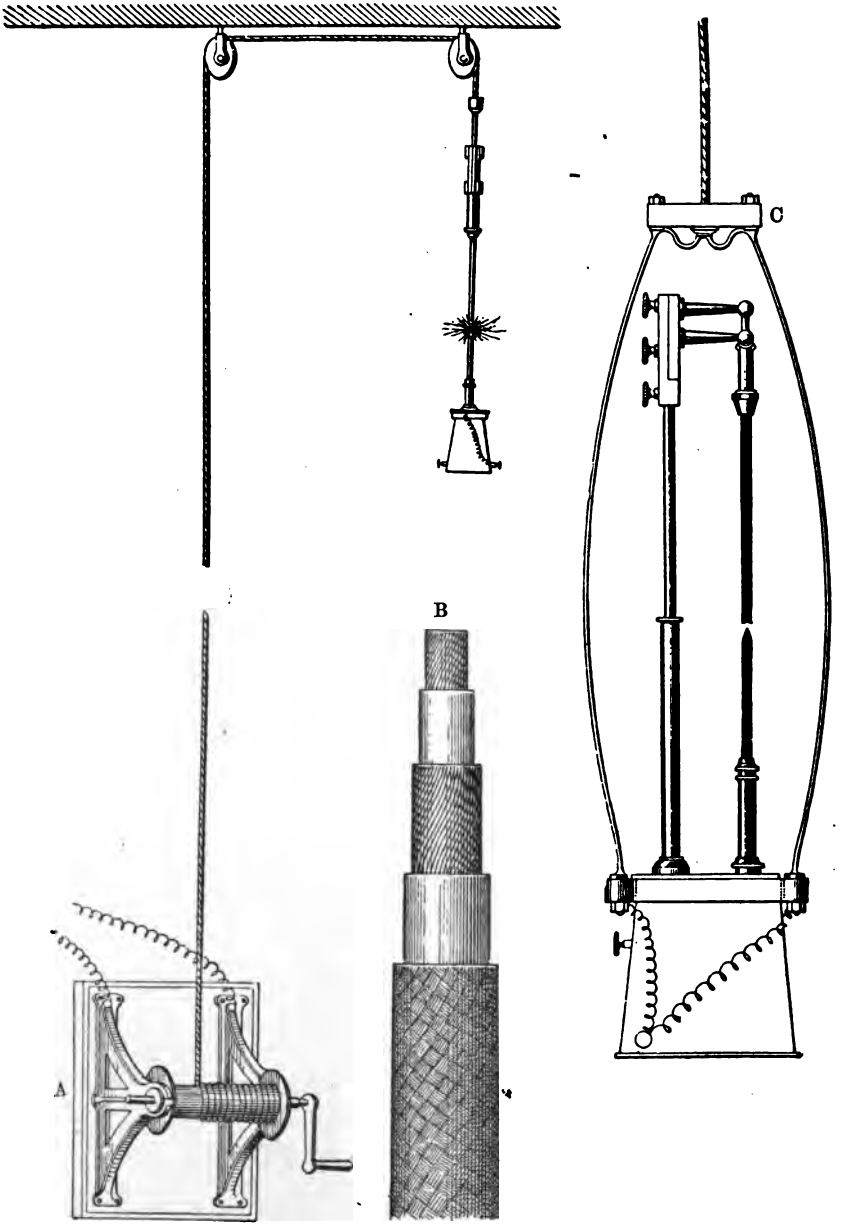

ranged as the sides of a pyramid, lined with tin plate, reflecting the light downwards. Two rods, H H, support the frosted

FIG. 94.

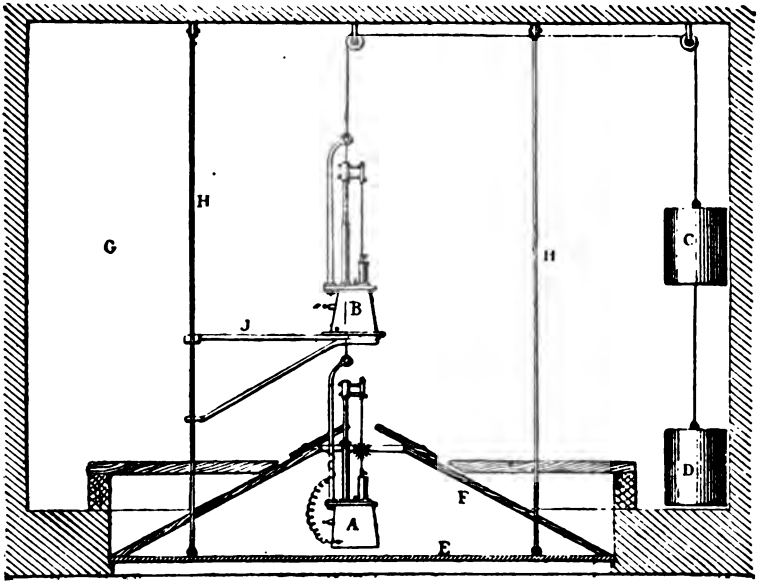

glass. A second lamp, B, counterpoised at C, and resting upon a bracket, J, is kept in readiness for substitution for the lamp A, when its carbons are consumed. The lighting is thus made nearly continuous.

In some cases it is advantageous to project the rays of light from the lamp upon a whitened ceiling by a parabolic reflector, thus diffusing the rays and preventing the casting of shadows.

It may, roughly, serve for the purposes of estimate, to remark that a single apparatus will light about 500 square yards of fitters' shops, modelling-rooms, etc.; 250 square yards of spinning-mills, printing-rooms, and the like; or 2000 square yards of open-air work. The lamps should always be, for these spaces, more than 15 feet from the ground.

CHAPTER XIII.

ELECTRIC CARBONS.

Davy, who made the first experiments on the voltaic arc, used rods of wood carbon quenched in water or mercury. These rods burnt with great brilliancy, very regularly, but too rapidly. Foucault replaced the wood carbon by the deposits collected from the walls of gas retorts. Retort carbon is far from uniform; it sometimes splits, frequently works irregularly, and produces considerable variations in brilliancy. These variations chiefly depend upon the presence of foreign matters, alkaline or earthy, and notably upon silica. These matters are much less refractory than the carbon, but they vaporize, and form part of the flame which envelops the arc. This flame is a better conductor than the voltaic arc, and has a much greater section; it consequently becomes less heated, and its power of radiation is less than that of the particles of carbon which constitute the arc.

Several inventors have endeavoured to substitute purer agglomerates; others have merely purified retort carbon. Among the processes proposed for the improvement of electric carbons are those of Staite and Edwards, Le Molt, Lacassagne and Thiers, Curmer, Jacquelain, Peyret, Archereau, Carré, Gaudoin, and Sawyer-Mann.

STAITE AND EDWARDS' CARBON.

In 1846 Staite and Edwards patented a process for the manufacture of carbons for the electric light, from a mixture of pulverized coke and sugar. The coke is first reduced to powder, and a small quantity of syrup added, the mixture

pugged, moulded, and strongly compressed. The carbon is then subjected to moderate heat, plunged into a concentrated solution of sugar, and subjected to a white heat.

LE MOLT'S CARBON.

In 1849 Le Molt patented, for electric carbons, a mixture consisting of two parts of retort carbon, two parts of wood charcoal or of coke, and one part of tar. The substances were pulverized, and brought to a stiff paste, then subjected to great pressure. The moulded pieces, covered with a coating of syrup, were placed beside each other in a vessel of retort carbon, and subjected to a high temperature for 20 to 30 hours.

LACASSAGNE AND THIERS' CARBON.

Lacassagne and Thiers fuse with the retort carbon a certain quantity of caustic potash or soda. With this bath at a red heat, they digest in it for a quarter of an hour retort-carbon rods. This operation changes into a soluble silicate of potash or soda the silica contained in the carbons. The carbon rods are then washed in boiling water, and subjected, at red heat, for several hours to the action of chlorine, to convert the different earthy matters into volatile chlorides. These carbons give a regular light.

CURMER'S CARBON.

Curmer calcines lampblack, benzine, and oil of turpentine moulded in the form of cylinders, leaving a porous carbon, which is soaked with resins or saccharine matters, and again calcined.

JACQUELAIN'S CARBON.

Jacquelain endeavoured to imitate the manufacture of retort carbon. With tars resulting from true distillation, consequently free from all non-volatile impurities, and effecting in special apparatus the conditions of decomposition, retort carbons ought to be reproduced possessing perfect purity. Jacquelain has done this with a tube of refractory earth, in an improvised furnace, and has obtained plates which, cut into rods, give a light steadier, whiter, and of about 25 per

cent. greater intensity, than ordinary carbons. These carbons require a considerable amount of manual labour, because the material is so hard that it can with difficulty be cut by the saw, and they produce considerable waste.

PEYRET'S CARBON.

Peyret prepares carbons by soaking pieces of elder-tree pith, or any other porous body, in liquefied sugar, and afterwards decomposing the sugar by heat. The operation is repeated a sufficient number of times to obtain very dense carbons, which are then submitted to a current of bisulphide of carbon vapour.

ARCHEREAU'S CARBON.

Archereau mixes carbon with magnesia. The magnesia has the advantage of making the light more steady, and of augmenting its power.

CARRÉ'S CARBON.

Carré has made a great number of experiments upon retort carbons impregnated with different salts. Carré proves that potash and soda at least double the length of the voltaic arc, render it more silent, combine with the silica, and eliminate it from the carbons during the action of the current. These substances augment the light in the proportion of 1·25 to 1. Lime, magnesia, and strontia augment the light in the proportion of 1·40 to 1. Iron and antimony augment to 1·60 or 1·70. Boracic acid increases the duration of the carbons by enveloping them with a vitreous layer, which isolates the oxygen from them, but without increasing the light.

Carré recommends a composition of powdered coke, calcined lampblack, and a syrup of 30 parts of cane sugar and 12 of gum.

The following formula is recommended:—

Coke powder	15 parts.
Calcined lampblack	5 „
Syrup	7 to 8 „

The whole is strongly triturated, and has added to it from one

to three parts of water, to compensate for the loss by evaporation, according to the degree of toughness to be given to the paste. The coke ought to be pulverized and purified by washing. The coke dust of gas retorts is generally pure enough. The paste is pressed and passed through a draw-plate. The carbons are placed in tiers in crucibles, and are subjected to a high temperature. First, the carbons are placed horizontally in the crucible, resting upon a bed of coke dust, every layer separated by paper to avoid adherence. Between the last layer and the cover is a layer of coke sand, and a layer of silicious sand upon the joint of the cover. The carbons then are put for two or three hours in a concentrated and boiling syrup of cane sugar, or caramel, with two or three intervals of cooling, in order that atmospheric pressure may force the syrup into all the pores. The carbons are then left to drain, by opening a cock placed at the bottom of the vessel, after which they are agitated in boiling water, to dissolve the sugar remaining on the surface. After drying, the carbons are submitted to a second heating, and are manipulated from stage to stage until they have acquired the requisite density or solidity.

Carré's carbons are more tenacious, and are harder, than those of retort carbon. They are remarkably similar to, but are better conductors than, retort carbons.

GAUDOIN'S CARBONS.

Gaudoin also has made numerous experiments upon carbons containing foreign substances. The following substances have been introduced into the carbons:—Phosphate of lime from bones, chloride of calcium, borate of lime, silicate of lime, pure precipitated silica, magnesia, borate of magnesia, phosphate of magnesia, alumina, silicate of alumina. The negative carbon being placed at the bottom, M. Gaudoin observed the following results:—Complete decomposition of the phosphate of lime under electrolytic action, calorific action, and reducing action of the carbon. The reduced calcium goes to the negative carbon, and burns in contact with the air with a reddish flame. The lime and phosphoric

acid are diffused into the air, producing abundant fumes. The light by a photometer is double that produced by carbons of the same section cut from the residue of gas retorts. Chloride of calcium, borate and silicate of lime, are also decomposed, but the boracic and silicic acids escape by volatilization from electric action, giving less light than phosphate of lime.

Silica in the carbons melts and volatilizes without being decomposed. Magnesia, borate, and phosphate of magnesia are decomposed; the magnesium burns with a white flame. The boracic and phosphoric acids vaporize. Increase of light is less considerable than with the lime salts.

Alumina and silicate of alumina are decomposed only with a very strong current, and burn with a blue flame of little lighting power. Carbons intended for the production of the voltaic arc ought to be chemically pure. Retort carbon, though containing only a small proportion of foreign matter, is not sufficiently pure. Washing in acids or alkalies, with the aim of extracting impurities, is costly and insufficient. Lampblack is pure enough, but its price is high, and its management difficult. M. Gaudoin decomposes by heat, in closed vessels, pitches, fats, or liquids, organic matters capable of yielding carbon sufficiently pure after decomposition by heat. This decomposition is effected in closed retorts, or plumbago crucibles heated to bright red. The bottoms of the crucibles are furnished with two tubes, one for the disengagement of gas and volatile matters, the other for the introduction of material. The products of decomposition may be conducted into a condensing chamber, to recover the tars, oils, essences, and hydro-carbons that are produced in this operation. M. Gaudoin utilizes the different sub-products in the manufacture of his carbons.

When the material has been properly chosen, carbon, more or less compact, remains in the retort. It is finely pulverized, and mixed with a certain quantity of lampblack, and of the carbides of hydrogen obtained as secondary products. These carbides are completely free from iron, and are much preferable to those found in commerce for the compounding of

carbons. M. Gaudoin has added to the draw-plate or moulding apparatus used in the manufacture of ordinary graphite carbons certain important improvements. Instead of forcing the carbon material through the die vertically, it is caused to issue horizontally from the mould in a descending angle of about 50°. The carbon is guided by tubes or gutters. By this means the mould can be completely emptied without interrupting the work, and as the carbon is constantly supported, it does not break under its own weight.

In some experiments made to determine the values in lighting power of the various carbons, it was found that when retort carbons produced a light of 824 candle-power, that produced by the artificial carbons varied between 960 and 1620 candle-power for the Archereau and Carré carbons, and between 1600 and 1680 for the Gaudoin carbons. Reduced to a uniform section, the consumption of the carbons was relatively—

Retort carbons	51 units
Archereau	66 „
Gaudoin	73 „
Carré	77 „

Subsequently, M. Gaudoin introduced a process of carbon manufacture in which, instead of carbonizing wood, reducing it to powder, dried wood is taken, shaped in the form of the carbon, which is carbonized and soaked in carbonaceous liquids as previously described. The distillation from the wood is effected slowly, in such manner as to drive out the volatile substances, and the final dessication is effected in a reducing atmosphere, at a very high temperature. The wood is previously washed in acids or alkalies, to remove impurities. By filling up the pores of the wood, by submitting it to the action of chloride of carbon and different carbides of hydrogen under heat, M. Gaudoin proposes to obtain carbons burning at a low rate, and giving a steady light.

SAWYER-MANN CARBONS.

That the filling up of the pores of the carbon rods by some means is likely to result in the production of the best

carbons, has been borne out by the results obtained by Messrs. Sawyer and Mann. These inventors take a carbon rod, and immerse it in olive oil until the oil has thoroughly saturated the pores of the carbon. The carbon rod, still immersed in the oil, is then included in a powerful circuit, the current heating the carbon and carbonizing the oil on its surface and in the pores. Carbons thus produced are extremely hard, and of steel-grey colour on the surface. Used as sources of electric light by incandescence, these carbons give remarkably concordant results.

COPPERED AND METALLIZED CARBONS.

Numerous suggestions have been made as to a method of rendering carbons more uniform conductors, by coating them with a deposit of metal, as copper or nickel. The same end has been proposed to be attained by incorporating with the carbons copper or iron in powder, by inserting a wire as a core to the carbon rod, or by winding a thin strip of metal around the carbon. Bad carbons are undoubtedly improved by such treatment; and in the very uneconomical method of consuming carbons by forcing the current through the whole of their length—adopted, however, in most lamps—the regularity of the current, and consequently, in a higher degree, of the light, is dependent upon perfection and continuity of the carbons in the whole length, because a crack or flaw in the carbon may introduce a very variable resistance. Thus, in one of these lamps with automatic action, in which a cracked carbon is mounted and through this carbon the current has to pass, when the two carbons come into contact the pressure closes up the crack, and a sudden increase of conductivity results. Immediately the carbons separate, there is correspondingly produced an equally sudden increase of resistance; presently the carbon becomes heated at the fracture, and flies off, causing extinction of the light. There is, for this reason, a great advantage due to the Werderman, Regnier, and Rapieff lamps, in which the current, instead of passing through the whole length of the carbon, is caused to enter the carbon from some point near its burning end. By this arrangement bad carbons will not have

so appreciable an effect upon the regularity of the light, nor is it necessary to coat them with metal.

Some experiments, conducted by the author, have shown a great increase of light in the voltaic arc when the carbons have been very slightly coated with metallic bismuth, and M. Gramme's experiments with carbon saturated with a solution of nitrate of bismuth, and dried, have confirmed these results.

LONDON: PRINTED BY WILLIAM CLOWES AND SONS, STAMFORD STREET AND CHARING CROSS.